VAS 741 077
VAS 741 079

Spare Parts
Pieces de Rechange
Ersatzteilliste
Запасные части

Tavole ricambi
Tabla de Repuestos
Figuras das Pecac

FAMILY NAME	VERSION	DESCRIPTION
741 077	741 077	*configuration* (s)*:* Quick lock - WDK tools - Mounting helper device PBD330 - On floor Bead breaker.
741 079	741 079	*configuration* (b)*:* WDK tools - Mounting helper device.

- (**GB**): in a given list, components sharing the same letter (A,B,C…), in the “Note” column are compatible.

- (**FR**): dans une table, les composants qui présentent la même lettre (A,B,C…) dans la colonne “Note”, sont compatibles.

- (**DE**): Die in einer Tabelle aufgeführten Komponenten, die in der Spalte “Anmerkung” mit demselben Buchstaben (A,B, C…) gekennzeichnet sind, sind kompatibel.

- (**RU**): В данном списке компоненты с одинаковыми буквами (A, B, C) в графе "Примечания" совместимы.

- (**IT**): all’interno di una tabella, i componenti che presentano la medesima lettera (A,B,C…) nella colonna “Nota”, sono compatibili.

- (**ES**): dentro de una tabla, los componentes de la columna “Nota” que poseen la misma letra (A, B, C…) son compatibles.

- (**PT**): em uma determinada tabela, os componentes que apresentarem a mesma letra (A,B,C…) na coluna “Nota”, são compatíveis.

INDEX		Page
EAZ0122G54A_D1	CABINET	4
EAZ0122G52A_C2	CABINET - NO ON FLOOR BB	7
EAZ0122G59A_B3	TOOL CARRIAGE	10
EAZ0122G57A_A	ON FLOOR BEAD BREAKER DEVICE	13
EAZ0122G68A_B	WHEEL SUPPORT- MANUAL	15
EAZ0122G77A_A	CLAMPING DEVICE-MANUAL	17
EAZ0137G83A_A	WHEEL SUPPORT QUICKLOK	19
EAZ0122G80A_B	CLAMPING DEVICE-QUICKLOCK STD	22
EAZ0122G69A_B1	WIRELESS LOCKING DEVICE ASSY	24
EAZ0138G09A_A1	CONTROL PANEL	26
EAZ0122G61A_B2	UPPER BEAD BREAKER	29
EAZ0122G60A_C4	LOWER BEAD BREAKER	32
EAZ0122G55A_B	PEDAL UNIT	36
EAZ0122G70A_B	PEDAL UNIT - NO ON FLOOR BB	39
EAZ0122G76A_A2	TRANSMISSION UNIT	42
EAZ0122G58A_B1	BEAD PUSHER	44
EAZ0122G56A_A	TUBELESS INFLATION UNIT	46
EAZ0137G22A_B	TUBELESS INFLATION UNIT - ASME	48
EAZ0122G63A_B	SUPPORT FOR CONES	51
EAZ0122G71A_B1	WHEEL LIFT	53
EAZ0122G53A_B1	ELECTRIC BOX	56
EAZ0132G86A_B1	ELECTRIC BOX - UL/CSA	59
EEWH923AWD_B1	ELECTRIC DIAGRAM	62
EEWH923AWD_B2	ELECTRIC DIAGRAM	63
EEWH924AWD_B1	ELECTRIC DIAGRAM	64
EEWH924AWD_B2	ELECTRIC DIAGRAM	65
EEWH770AWD_C1	ELECTRIC DIAGRAM	66
EEWH770AWD_C2	ELECTRIC DIAGRAM	67
EEWH778AWD_C1	ELECTRIC DIAGRAM	68
EEWH778AWD_C2	ELECTRIC DIAGRAM	69
EEWH778AJWD_B1	ELECTRIC DIAGRAM	70
EEWH778AJWD_B2	ELECTRIC DIAGRAM	71
TEEWH778APD_C	PNEUMATIC SCHEME	72

UPDATING GUIDE:

Nov. 2020: EAZ0122G69A_B > B1, EAZ0138G09A_A > A1

EAZ0122G54A.D

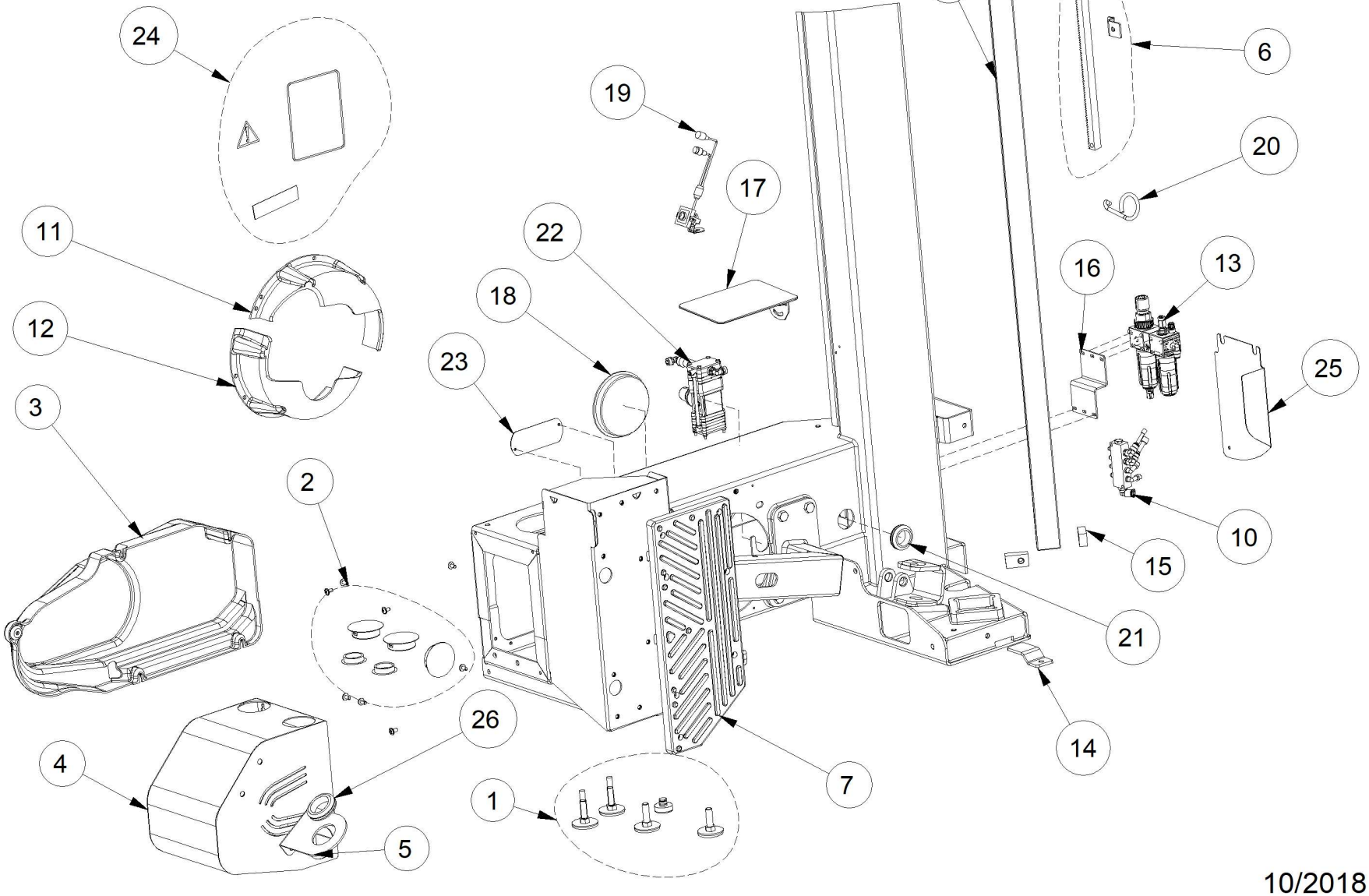

10/2018

Pos	Code	Designation Designazione ОПИСАНИЕ	Désignation Designaciòn	Bezeichnung Designação	N.	Note Nota HOTa	A	B	C
1	EAK0330G87A	SUPPORT FEET KIT KIT PIEDI DI SUPPORTO КОМПЛЕКТ ОПОРНЫХ НОЖЕК	KIT PIEDS DE SUPPORT KIT PIES DE SOPORTE	SATZ STÜTZFÜSSE KIT PÉS DE SUPORTE	1			X	
2	EAK0330G88A	PLUG KIT KIT TAPPI КОМПЛЕКТ ЗАГЛУШЕК	KIT BOUCHONS KIT TAPONES	STOPFENSATZ KIT TAMPAS	1		X		X
3	EAC0127G06A	BELT COVER - CSA COPERTURA CINGHIA КОЖУХ РЕМНЯ	CARTER COURROIE CÁRTER CORREA	RIEMENABDECKUNG CÁRTER CORREIA	1	UL/CSA		X	
3	EAC0127G14A	BELT COVER COPERTURA CINGHIA КОЖУХ РЕМНЯ	CARTER COURROIE CÁRTER CORREA	RIEMENABDECKUNG CÁRTER CORREIA	1			X	
4	EAK0341G83A	FRONT COVER KIT KIT COPERTURA ANTERIORE КОМПЛЕКТ ПЕРЕДНЕЙ КРЫШКИ	KIT COUVERTURE AVANT KIT CÁRTER DELANTERO	SATZ VORDERE ABDECKUNG KIT COBERTURA FRONTAL	1			X	
5	EAS2200G87A	SUPPORT LOCKING SHAFT SUPPORTO LOCKING SHAFT ОПОРА ВАЛА БЛОКИРОВКИ	SUPPORT VERROUILLAGE ARBRE SOPORE LOCKING SHAFT	HALTERUNG VERRIEGELUNGSWELLE SUPORTE LOCKING SHAFT	1			X	
6	EAK0330G86A	RACK MOUNTING KIT KIT MONTAGGIO CREMAGLIERA КОМПЛЕКТ МОНТАЖА ЗУБЧАТОЙ РЕЙКИ	KIT MONTAGE CREMAILLERE KIT MONTAJE CREMALLERA	MONTAGESATZ ZAHNSTANGE KIT MONTAGEM CREMALHEIRA	1			X	
7	EAC0099G22A	PAD- SUPPORT, BEADBREAKER TAMPONE APPOGGIO STALLONATORE ОПОРА РАЗБОРТИРОВЩИКА	PALIER APPUI DETALONNEUR TAMPÓN SOPORTE DESTALONADOR	AUFLAGEKISSEN ABDRÜCKER TAMPAO APOIO DESMON. PNEU	1		X		X
9	EAM0080G67A	GUIDE BAR ASTA GUIDA CARRELLI НАПРАВЛЯЮЩАЯ ШТАНГА	TIGE GUIDE VARILLA GUÍA CARROS	FÜHRUNGSSCHIENE HASTE GUIA CARROS	1			X	
10	EAK0341G22A	KIT MANIFOLD 1/4-4D-1/8 GRUPPO MANIFOLD 1/4-4D-1/8 КОЛЛЕКТОР	DISTRIBUTEUR 1/4-4D-1/8 DISTRIBUDOR GIRATORIO 1/4-4D-1/8	DREHVERTEILER1/4-4D-1/8 DISTRIBUIDOR GIRATÓRIO	1		X		
11	EAM0117G74A	UPPER COVER FOR BB CYLINDER COPERTURA SUPERIORE CILINDRO BB ВЕРХНЯЯ КРЫШКА ЦИЛИНДРА BB	COUVERTURE SUPERIEURE VERIN BB CÁRTER SUPERIOR CILINDRO BB	OBERE ABDECKUNG BB-ZYLINDER COBERTURA SUPERIOR CILINDRO BB	1			X	
12	EAM0117G73A	LOWER COVER FOR BB CYLINDER COPERTURA INFERIORE CILINDRO BB НИЖНЯЯ КРЫШКА ЦИЛИНДРА BB	COUVERTURE INFERIEURE VERIN BB CÁRTER INFERIOR CILINDRO BB	UNTERE ABDECKUNG BB-ZYLINDER COBERTURA INFERIOR CILINDRO BB	1			X	
13	EAA0439G83A	AIR FILTER GROUP GRUPPO FILTRO ГРУППА ФИЛЬТР	GROUPE FILTRE GRUPO FILTRO	FILTER-EINHEIT GRUPO FILTRO	1		X		X
14	EAS2131G98A	FOOT FRAME PIEDE ANCORAGGIO TELAIO PAMA	PIED ANCRAGE CHASSIS PIE DE ANCLAJE BASTIDOR	RAHMENVERANKERUNGSFUSS PÉ DE ANCORAGEM ESTRUTURA	1			X	
15	EAM0062G14A	FIXING PLATE BLOCCHETTO DI FISSAGGIO ФИКСИРУЮЩАЯ ПЛАСТИНА	BLOQUE FIXATION BLOQUEO AJUSTE	BEFESTIGUNGSBLOCK BLOCO DE FIXAÇÃO	4			X	
16	EAS2107G67A	BRACKET,CATAPHORESIS FILTER FIXING STAFFA FISSAGGIO FILTRO CATAFORESI КРОНШТЕЙН БЛОКА ПОДГОТОВКИ ВОЗДУХА	ETRIER FIXATIONFILTRE CATAPHORESIS ESTRIBO AJUSTE FILTRO CATAFORESIS	BEFESTIGUNGSBÜGEL FILTER KTL SCHWARZ PRENDEDOR FIX. FILTRO CATAF. PRETO	1			X	
17	EAA0373G18A	ADJUSTABLE MIRROR SPECCHIO ORIENTABILE ЗЕРКАЛО РЕГУЛИРУЕМОЕ	MIROIR ORIENTABLE ESPEJO ORIENTABLE	VERSTELLBARER SPIEGEL ESPELHO ORIENTÁVEL	1			X	

A available - disponible - vorhanden - beschikbaar
disponibile - disponible - disponivel - Доступно

B on request - sur demande - auf Antrag - op aanvraag
a richiesta - a petición - no pedido - По запросу

C suggested - suggeré - vorgeschlagene - aanbevolen
consigliato - sugerido - sugerido - Предлагается

Pos	Code	Designation Designazione ОПИСАНИЕ	Désignation Designaciòn	Bezeichnung Designação	N.	Note Nota HOTa	A	B	C
18	1-15476A	PLASTIC CAP-Ø120mm HOLE TAPPO PLASTICA FORO Ø120mm ПЛАСТИКОВАЯ КРЫШКА ОТВЕРСТИЕ	BOUCHON EN PLAST.ORIFICE Ø120mm TAPÓN DE PLÁST.ORIFICIO Ø120mm	KUNSTSTOFFKAPPE, BOHRUNG Ø120mm TAMPA DE PLÁST. FURO Ø120mm	1	Ø120mm		X	
19	EAK0330G89A	MICROCAM GROUP KIT KIT GRUPPO MICROCAMERA КОМПЛЕКТ УЗЛА МИКРОКАМЕРЫ	KIT GROUPE MICROCAMERA KIT GRUPO MICROCÁMARA	SATZ MIKROKAMERAGRUPPE KIT GRUPO MICROCÂMERA	1			X	
20	EAM0147G62A	SUPPORT FOR PIPE SUPPORTO PER TUBI ОПОРА ДЛЯ ТРУБ	SUPPORT POUR TUYAUX SOPORTE PARA TUBOS	HALTERUNG FÜR ROHRLEITUNGEN SUPORTE PARA TUBOS	1			X	
21	8-11416A	GROMMET PASSACAVO GOMMA D.40 РЕЗИНОВАЯ КАБЕЛЬНАЯ МУФТА	PASSE-CABLE CAOUTCHOUC D. 40 PASACABLE GOMA D.40	KABELDURCHFÜHRUNG D. 40 PASSA-CABOS DE BORRACHA D.40	1	Ø40mm dia.		X	
22	EAA0384G22A	VALVE, AIR CONTROL VALVOLA LIMITATRICE PRESSIONE КЛАПАН	CLAPET REDUCTEUR DE PRESSION VÁLVULA LIMITADORA PRESIÓN	VENTIL LUFTREGELUNG VÁLVULA LIMITADORA PRESSÃO	1	internal version	X		
23	EAS2175G35A	COVER ,METAL PROTEZIONE ЗАЩИТА	PROTECTION PROTECCIÓN	ABDECKUNG, METALL PROTEÇÃO	1			X	
24	EAK0330G63A	CABINET LABEL KIT KIT ETICHETTE CASSONE КОМПЛЕКТ ЭТИКЕТКИ КУЗОВА	KIT ETIQUETTES CAISSON KIT ETIQUETAS CAJÓN	ETIKETTENSATZ SCHRANK KIT ETIQUETAS CAIXOTÃO	1		X		
25	EAS2201G99A	PROTECTION PLATE LAMIERA DI PROTEZIONE ЗАЩИТНЫЙ КОЖУХ	PROTECTEUR EN TOLE CHAPA DE PROTECCIÓN	SCHUTZBLECH CHAPA DE PROTEÇÃO	1			X	
26	8-12216A	GROMMET OPEN HOLE 52 mm, EDPM PASSACAVO GOMMA D.52 РЕЗИНОВАЯ КАБЕЛЬНАЯ МУФТА	PASSE-CABLE CAOUTCHOUC D. 52 PASACABLE GOMA D.52	KABELDURCHFÜHRUNG D. 52 PASSA-CABOS DE BORRACHA D.52	1	D.52	X		

A available - disponible - vorhanden - beschikbaar
disponibile - disponible - disponivel - Доступно

B on request - sur demande - auf Antrag - op aanvraag
a richiesta - a petición - no pedido - По запросу

C suggested - suggeré - vorgeschlagene - aanbevolen
consigliato - sugerido - sugerido - Предлагается

EAZ0122G52A.C

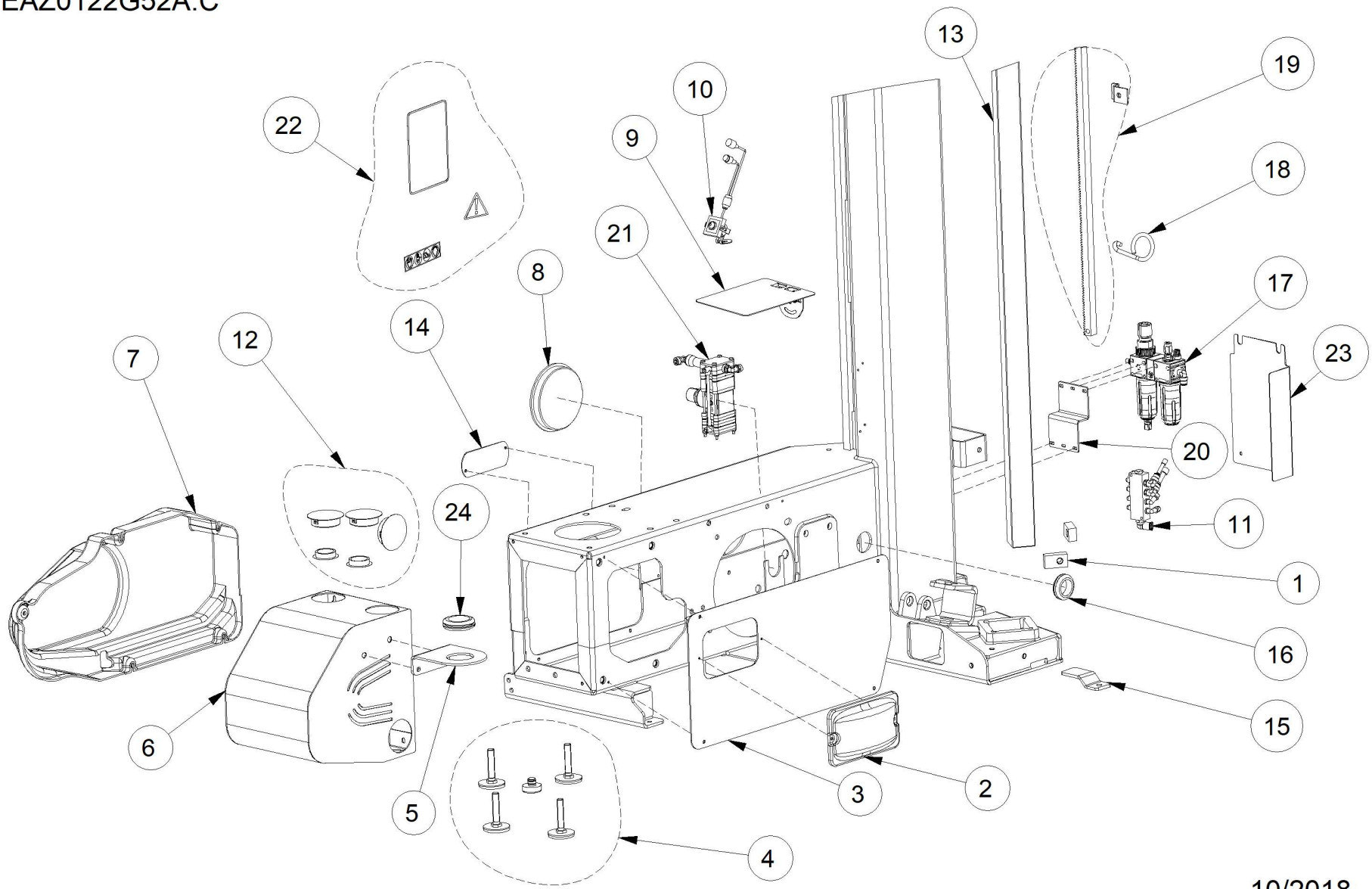

10/2018

Pos	Code	Designation Designazione ОПИСАНИЕ	Désignation Designaciòn	Bezeichnung Designação	N.	Note Nota HOTa	A	B	C
1	EAM0062G14A	FIXING PLATE BLOCCHETTO DI FISSAGGIO ФИКСИРУЮЩАЯ ПЛАСТИНА	BLOQUE FIXATION BLOQUEO AJUSTE	BEFESTIGUNGSBLOCK BLOCO DE FIXAÇÃO	4			X	
2	EAC0125G95A	SIDE COVER COPERCHIO LATERALE КОЖУХ БОКОВОЙ	COUVERTURE LATERALE COBERTURA LATERAL	SEITENABDECKUNG COBERTURA LATERAL	1			X	
3	EAS2195G49A	LEFT SIDE SHEET METAL COVER COPERTURA LATERALE SINISTRA КОЖУХ БОКОВОЙ ЛЕВАЯ	COUVERTURE LATERALE GAUCHE COBERTURA LATERAL IZQUIERDA	SEITENABDECKUNG LINKS, METALL COBERTURA LATERAL ESQUERDA	1			X	
4	EAK0330G87A	SUPPORT FEET KIT KIT PIEDI DI SUPPORTO КОМПЛЕКТ ОПОРНЫХ НОЖЕК	KIT PIEDS DE SUPPORT KIT PIES DE SOPORTE	SATZ STÜTZFÜSSE KIT PÉS DE SUPORTE	1			X	
5	EAS2200G87A	SUPPORT LOCKING SHAFT SUPPORTO LOCKING SHAFT ОПОРА ВАЛА БЛОКИРОВКИ	SUPPORT VERROUILLAGE ARBRE SOPORE LOCKING SHAFT	HALTERUNG VERRIEGELUNGSWELLE SUPORTE LOCKING SHAFT	1			X	
6	EAK0341G83A	FRONT COVER KIT KIT COPERTURA ANTERIORE КОМПЛЕКТ ПЕРЕДНЕЙ КРЫШКИ	KIT COUVERTURE AVANT KIT CÁRTER DELANTERO	SATZ VORDERE ABDECKUNG KIT COBERTURA FRONTAL	1			X	
7	EAC0127G06A	BELT COVER - CSA COPERTURA CINGHIA КОЖУХ РЕМНЯ	CARTER COURROIE CÁRTER CORREA	RIEMENABDECKUNG CÁRTER CORREIA	1	UL/CSA		X	
7	EAC0127G14A	BELT COVER COPERTURA CINGHIA КОЖУХ РЕМНЯ	CARTER COURROIE CÁRTER CORREA	RIEMENABDECKUNG CÁRTER CORREIA	1			X	
8	1-15476A	PLASTIC CAP-Ø120mm HOLE TAPPO PLASTICA FORO Ø120mm ПЛАСТИКОВАЯ КРЫШКА ОТВЕРСТИЕ	BOUCHON EN PLAST.ORIFICE Ø120mm TAPÓN DE PLÁST.ORIFICIO Ø120mm	KUNSTSTOFFKAPPE, BOHRUNG Ø120mm TAMPA DE PLÁST. FURO Ø120mm	1	Ø120mm		X	
9	EAA0373G18A	ADJUSTABLE MIRROR SPECCHIO ORIENTABILE ЗЕРКАЛО РЕГУЛИРУЕМОЕ	MIROIR ORIENTABLE ESPEJO ORIENTABLE	VERSTELLBARER SPIEGEL ESPELHO ORIENTÁVEL	1			X	
10	EAK0330G89A	MICROCAM GROUP KIT KIT GRUPPO MICROCAMERA КОМПЛЕКТ УЗЛА МИКРОКАМЕРЫ	KIT GROUPE MICROCAMERA KIT GRUPO MICROCÁMARA	SATZ MIKROKAMERAGRUPPE KIT GRUPO MICROCÂMERA	1			X	
11	EAK0341G22A	KIT MANIFOLD 1/4-4D-1/8 GRUPPO MANIFOLD 1/4-4D-1/8 КОЛЛЕКТОР	DISTRIBUTEUR 1/4-4D-1/8 DISTRIBUDOR GIRATORIO 1/4-4D-1/8	DREHVERTEILER1/4-4D-1/8 DISTRIBUIDOR GIRATÓRIO	1		X		
12	EAK0330G88A	PLUG KIT KIT TAPPI КОМПЛЕКТ ЗАГЛУШЕК	KIT BOUCHONS KIT TAPONES	STOPFENSATZ KIT TAMPAS	1		X		X
13	EAM0080G67A	GUIDE BAR ASTA GUIDA CARRELLI НАПРАВЛЯЮЩАЯ ШТАНГА	TIGE GUIDE VARILLA GUÍA CARROS	FÜHRUNGSSCHIENE HASTE GUIA CARROS	1			X	
14	EAS2175G35A	COVER ,METAL PROTEZIONE ЗАЩИТА	PROTECTION PROTECCIÓN	ABDECKUNG, METALL PROTEÇÃO	1			X	
15	EAS2131G98A	FOOT FRAME PIEDE ANCORAGGIO TELAIO РАМА	PIED ANCRAGE CHASSIS PIE DE ANCLAJE BASTIDOR	RAHMENVERANKERUNGSFUSS PÉ DE ANCORAGEM ESTRUTURA	1			X	
16	8-11416A	GROMMET PASSACAVO GOMMA D.40 РЕЗИНОВАЯ КАБЕЛЬНАЯ МУФТА	PASSE-CABLE CAOUTCHOUC D. 40 PASACABLE GOMA D.40	KABELDURCHFÜHRUNG D. 40 PASSA-CABOS DE BORRACHA D.40	1	Ø40mm dia.		X	

A available - disponible - vorhanden - beschikbaar
disponibile - disponible - disponivel - Доступно

B on request - sur demande - auf Antrag - op aanvraag
a richiesta - a petición - no pedido - По запросу

C suggested - suggeré - vorgeschlagene - aanbevolen
consigliato - sugerido - sugerido - Предлагается

Pos	Code	Designation Designazione ОПИСАНИЕ	Désignation Designaciòn	Bezeichnung Designação	N.	Note Nota HOTa	A	B	C
17	EAA0439G83A	AIR FILTER GROUP GRUPPO FILTRO ГРУППА ФИЛЬТР	GROUPE FILTRE GRUPO FILTRO	FILTER-EINHEIT GRUPO FILTRO	1		X		X
18	EAM0147G62A	SUPPORT FOR PIPE SUPPORTO PER TUBI ОПОРА ДЛЯ ТРУБ	SUPPORT POUR TUYAUX SOPORTE PARA TUBOS	HALTERUNG FÜR ROHRLEITUNGEN SUPORTE PARA TUBOS	1			X	
19	EAK0330G86A	RACK MOUNTING KIT KIT MONTAGGIO CREMAGLIERA КОМПЛЕКТ МОНТАЖА ЗУБЧАТОЙ РЕЙКИ	KIT MONTAGE CREMAILLERE KIT MONTAJE CREMALLERA	MONTAGESATZ ZAHNSTANGE KIT MONTAGEM CREMALHEIRA	1			X	
20	EAS2107G67A	BRACKET,CATAPHORESIS FILTER FIXING STAFFA FISSAGGIO FILTRO CATAFORESI КРОНШТЕЙН БЛОКА ПОДГОТОВКИ ВОЗДУХА	ETRIER FIXATIONFILTRE CATAPHORESIS ESTRIBO AJUSTE FILTRO CATAFORESIS	BEFESTIGUNGSBÜGEL FILTER KTL SCHWARZ PRENDEDOR FIX. FILTRO CATAF. PRETO	1			X	
21	EAA0384G22A	VALVE, AIR CONTROL VALVOLA LIMITATRICE PRESSIONE КЛАПАН	CLAPET REDUCTEUR DE PRESSION VÁLVULA LIMITADORA PRESIÓN	VENTIL LUFTREGELUNG VÁLVULA LIMITADORA PRESSÃO	1	internal version	X		
22	EAK0330G63A	CABINET LABEL KIT KIT ETICHETTE CASSONE КОМПЛЕКТ ЭТИКЕТКИ КУЗОВА	KIT ETIQUETTES CAISSON KIT ETIQUETAS CAJÓN	ETIKETTENSATZ SCHRANK KIT ETIQUETAS CAIXOTÃO	1		X		
23	EAS2201G99A	PROTECTION PLATE LAMIERA DI PROTEZIONE ЗАЩИТНЫЙ КОЖУХ	PROTECTEUR EN TOLE CHAPA DE PROTECCIÓN	SCHUTZBLECH CHAPA DE PROTEÇÃO	1			X	
24	8-12216A	GROMMET OPEN HOLE 52 mm, EDPM PASSACAVO GOMMA D.52 РЕЗИНОВАЯ КАБЕЛЬНАЯ МУФТА	PASSE-CABLE CAOUTCHOUC D. 52 PASACABLE GOMA D.52	KABELDURCHFÜHRUNG D. 52 PASSA-CABOS DE BORRACHA D.52	1	D.52	X		

A available - disponible - vorhanden - beschikbaar
disponibile - disponible - disponivel - Доступно

B on request - sur demande - auf Antrag - op aanvraag
a richiesta - a petición - no pedido - По запросу

C suggested - suggeré - vorgeschlagene - aanbevolen
consigliato - sugerido - sugerido - Предлагается

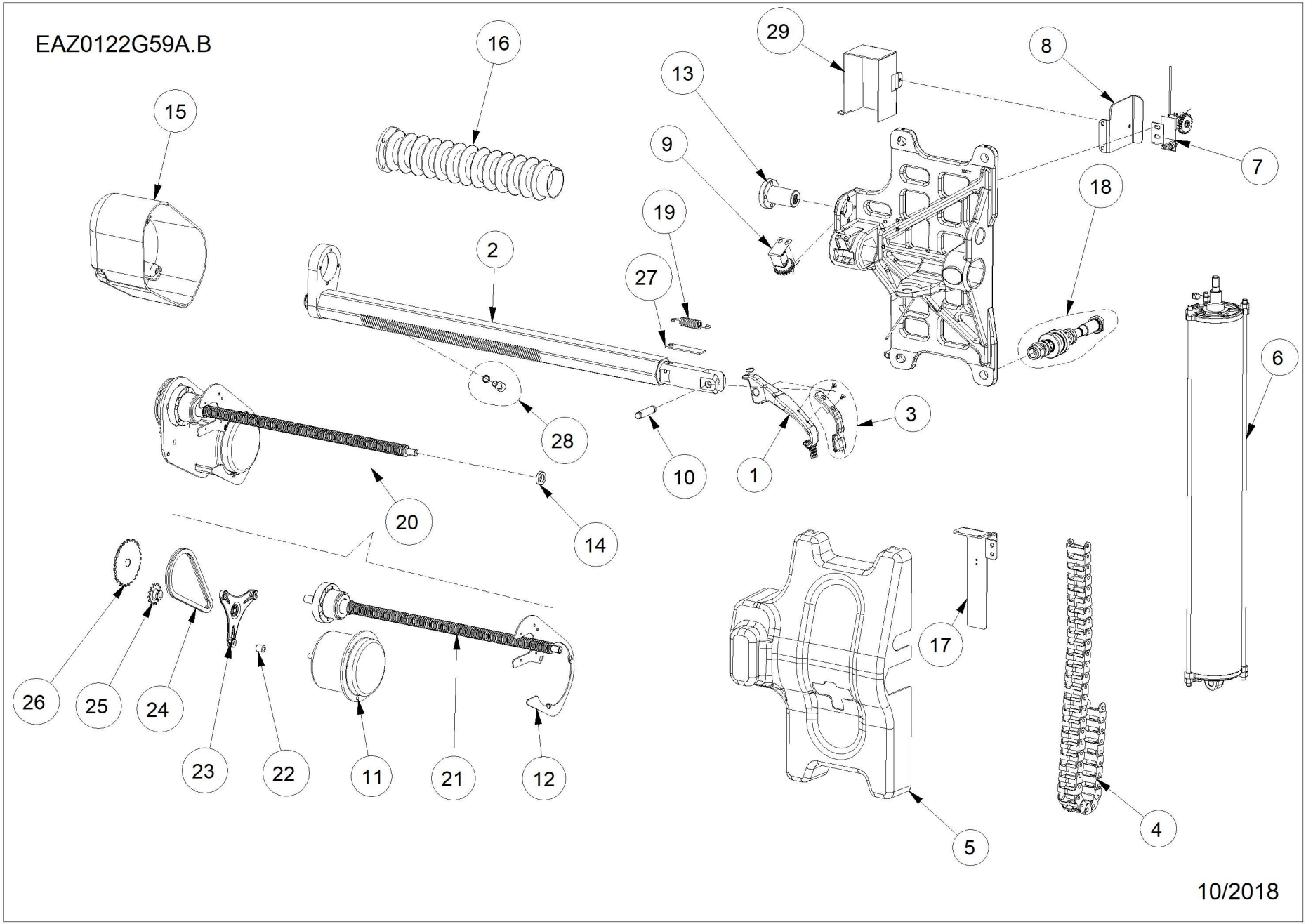
EAZ0122G59A.B
16
29
8
13
15
9
7
18
19
2
27
6
28
3
10
1
20
14
17
26
25
24
23
22
11
21
12
5
4
10/2018

Pos	Code	Designation Designazione ОПИСАНИЕ	Désignation Designaciòn	Bezeichnung Designação	N.	Note Nota HOTa	A	B	C
1	EAM0161G88B	M/D TOOL UTENSILE MONT./SMONT. МОНТАЖНАЯ ГОЛОВКА	OUTIL MONTEGE ET DEMONTAGE HERRAMIENTA MONTAJE-DESMONT.	MONTIER-DEMONTIERWERKZEUG VERSTÄRK FERRAMENTA MONTAGEM-DESMONT.	1	IMPROVED		X	
2	EAA0481G93A	TOOL CARRIAGE ARM ASSY GRUPPO BRACCIO UTENSILE УЕЛ РЫЧАГА ИНСТРУМЕНТА	GROUPE BRAS OUTIL GRUPO BRAZO HERRAMIENTA	WERKZEUGWAGEN ARMBAUGRUPPE GRUPO BRAÇO FERRAMENTA	1			X	
3	EAK0341G32A	powerMONT TOOL PROTECTOR KIT KIT PROTEZIONI UTENSILE powerMONT КОМПЛЕКТ ЗАЩИТЫ ИНСТРУМЕНТА powerMC	KIT PROTECTION OUTIL powerMONT KIT PROTECCIÓN HERRAMIENTA powerMONT	SCHUTZSATZ WERKZEUG powerMONT KIT PROTEÇÃO FERRAMENTA powerMONT	1	powerMONT	X		X
4	8-05931A	IGUS EASYCHAIN CATENA IGUS EASYCHAIN ЦЕПЬ	CHAINE IGUS EASYCHAIN CADENA IGUS EASYCHAIN	KETTE IGUS EASYCHAIN CORRENTE IGUS EASYCHAIM	1			X	
5	EAC0115G31A	TOOLS CARRIAGE COVER PROTEZIONE CARRO UTENSILE ЗАЩИТЫ ТЕЛЕЖКИ ИНСТРУМЕНТОВ	PROTECTION CHARIOT OUTIL PROTECCIÓN CARRO HERRAMIENTA	ABDECKUNG WERKZEUGWAGEN PROTEÇÃO CARRINHO FERRAMENTA	1			X	
6	EAA0408G99A	Ø90 CYLINDER STROKE 611MM CILINDRO Ø90 CORSA 611MM ЦИЛИНДР О90 ХОД 611MM	VERIN Ø90 COURSE 611 MM CILINDRO Ø90 CARRERA 611MM	ZYLINDER D. 90, 611 mm HUB CILINDRO Ø90 CURSO 611MM	1		X		X
7	EAK0330G82A	POTENTIOMETER GROUP KIT KIT GRUPPO POTENIZOMETRO КОМПЛЕКТ УЗЛА ПОТЕНЦИОМЕТРА	KIT GROUPE POTENTIOMETRE KIT GRUPO POTENCIÓMETRO	SATZ POTENTIOMETERBAUGRUPPE KIT GRUPO POTENCIOMETRO	1		X		X
7	EAK0375G06A	POTENTIOMETER GROUP KIT KIT GRUPPO POTENZIOMETRO КОМПЛЕКТ УЗЛА ПОТЕНЦИОМЕТРА	KIT GROUPE POTENTIOMETRE KIT GRUPO POTENCIÓMETRO	SATZ POTENTIOMETERBAUGRUPPE KIT GRUPO POTENCIOMETRO	1	CSA	X		X
8	EAS2169G59A	COVER POTENTIOMETER ,MONTY 8700 PROTEZIONE POTENZIOMETRO ЗАЩИТА ПОТЕНЦИОМЕТРА	PROTECTION POTENTIOMETRE PROTECCIÓN POTENCIÓMETRO	POTENTIOMETERABDECKUNG, MONTY 8700 PROTEÇÃO POTENCIOMETRO	1			X	
9	EAA0409G02A	POTENTIOMETER GROUP GRUPPO POTENZIOMETRO УЗЕЛ ПОТЕНЦИОМЕТРА	GROUPE POTENTIOMETRE GRUPO POTENCIÓMETRO	POTENTIOMETERBAUGRUPPE GRUPO POTENCIOMETRO	1		X		X
9	EAA0503G34A	POTENTIOMETER GROUP GRUPPO POTENZIOMETRO УЗЕЛ ПОТЕНЦИОМЕТРА	GROUPE POTENTIOMETRE GRUPO POTENCIÓMETRO	POTENTIOMETERBAUGRUPPE GRUPO POTENCIOMETRO	1	UL/CSA	X		X
10	EAM0117G55A	SHAFT-HINGE TOOL M/D PERNO FULCRO UNTENSILE ШТИФТ ОПОРЫ ИНСТРУМЕНТОВ	PIVOT D'APPUI OUTIL PERO PIVOTE HERRAMIENTA	DREHZAPFEN WERKZEUG PINO FULCRO FERRAMENTA	1			X	
11	EAA0439G00A	MOTOR 48VDC WITH CONNECTOR MOTORE 48VDC CON CONNETTORE ДВИГАТЕЛЬ 48VDC С РАЗЪЕМОМ	MOTEUR 48 VCC AVEC CONNECTEUR MOTOR 48VCC CON CONECTOR	MOTOR 48VDC MIT VERBINDER MOTOR 48VDC COM CONECTOR	1		X		X
12	EAS2169G52A	PROTECTION FOR MOTOR PROTEZIONE MOTORE ЗАЩИТА ДВИГАТЕЛЯ	PROTECTION MOTEUR PROTECCIÓN MOTOR	MOTORSCHUTZ PROTEÇÃO MOTOR	1			X	
13	EAM0102G59A	LEAD SCREW NUT Tr20x4 HDL20 AR CHIOCCIOLA Tr20X4 AR СПИРАЛЬНЫЙ КОЖУХ	ECROU DEE VIS Tr20X4 AR CÓCLEA Tr20X4 AR	SCHRAUBENMUTTER Tr20x4 HDL20 AR ESPIRAL Tr20X4 AR	1			X	
14	EAM0117G57A	SPACER DISTANZIALE РАСПОРНАЯ ВТУЛКА	ENTRETOISE SEPARADOR	DISTANZSTÜCK DISTANCIADOR	1			X	
15	EAC0115G25A	MOTOR COVER COPERTURA MOTORE КРЫШКА ДВИГАТЕЛЯ	COUVERTURE MOTEUR CÁRTER MOTOR	MOTORABDECKUNG COBETURA MOTOR	1		X		X

A available - disponible - vorhanden - beschikbaar
disponibile - disponible - disponivel - Доступно

B on request - sur demande - auf Antrag - op aanvraag
a richiesta - a petición - no pedido - По запросу

C suggested - suggeré - vorgeschlagene - aanbevolen
consigliato - sugerido - sugerido - Предлагается

Pos	Code	Designation Designazione ОПИСАНИЕ	Désignation Designaciòn	Bezeichnung Designação	N.	Note Nota HOTa	A	B	C
15	EAC0126G72A	MOTOR COVER COPERTURA MOTORE КРЫШКА ДВИГАТЕЛЯ	COUVERTURE MOTEUR CÁRTER MOTOR	MOTORABDECKUNG COBETURA MOTOR	1	CSA	X		X
16	EAC0114G69A	BELLOW COVER FOR TRAPEZOIDAL SCREW SOFFIETTO PER VITE TRAPEZIA СИЛЬФОН ДЛЯ БОЛТА ТРАПЕЦИИ	SOUFFLET POUR VIS TRAPEZE FUELLE PARA TORNILLO TRAPEZOIDAL	FALTENBALGABDECKUNG F/TRAPEZGEWINDI FOLI PARA PARAFUSO TRAPEZOIDAL	1			X	
17	EAM0075G08A	MOBILE CATENARY SUPPORT SUPPORTO CATENARIA MOBILE ДЕРЖАТЕЛЬ КОНТАКТОВ	SUPPORT CATENAIRE MOBILE SOPORTE CADENA MÓVIL	HALTERUNG BEWEGLICHE KETTE SUPORTE CORRENTES MÓVEL	1			X	
18	EAK0330G81A	TOOL CARRIAGE ROLLER KIT KIT RUOTA CARRO UTENSILE КОМПЛЕКТ КОЛЕСА ТЕЛЕЖКИ ИНСТРУМЕНТ(	KIT ROUE CHARIOT OUTIL KIT RUEDA CARRO HERRAMIENTA	ROLLENSATZ WERKZEUGWAGEN KIT RODA CARRINHO FERAMENTA	4			X	
19	EAM0117G56A	SPRING,RECALL TOOL M/D MOLLA RITORNO UTENSILE ВОЗВРАТНАЯ ПРУЖИНА ИНСТРУМЕНТОВ	RESSORT RETOUR OUTIL MUELLE RETORNO HERRAMIENTA	WERKZEUGRÜCKHOLFEDER MOLA RETORNO FERRAMENTA	1			X	
20	EAA0408G94A	ACTUATOR MOTOR GROUP FOR TOOL ASSY GRUPPO MOTORE/ATTUATORE UTENSILE УЗЛЕ ДВИГАТЕЛЯ/ИСПОЛНИТЕЛЬНОГО МЕХА	GROUPE MOTEUR/ACTIONNEUR OUTIL GRUPO MOTOR/ACTUADOR HERRAMIENTA	BAUGRUPPE MOTOR/STELLANTRIEB WERKZE GRUPO MOTOR/ATUADOR FERRAMENTA	1			X	
21	EAA0408G92A	ASSY TRAPEZOIDAL SCREW GRUPPO VITE TRAPEZIA УЗЕЛ БОЛТА ТРАПЕЦИИ	GROUPE VIS TRAPEZE GRUPO TORNILLO TRAPEZOIDAL	BAUGRUPPE TRAPEZGEWINDETRIEB GRUPO PARAFUSO TRAPEZOIDAL	1			X	
22	EAM0093G79A	SPACER DISTANZIALE РАСПОРНАЯ ВТУЛКА	ENTRETOISE SEPARADOR	DISTANZSTÜCK DISTANCIADOR	3			X	
23	EAA0393G84A	ASSY BEARING SUPPORT GRUPPO SUPPORTO CUSCINETTO УЗЛЕ ОПОРЫ ПОДШИПНИКА ST. 2119	GROUPE SUPPORT ROULEMENT GRUPO SOPORTE COJINETE	BAUGRUPPE LAGERHALTERUNG GRUPO SUPORTEOLAMENTO	1		X		
24	8-08131A	SINGLE ROLLER CHAIN CATENA A RULLI AD ANELLO CHIUSO УЗЕЛ РОЛИКОВ С ЗАКРЫТЫМ КОЛЬЦОМ	CHAINE A ROULEAUX A BAGUE FERMEE CADENA DE RODILLOS ANILLO CERRADO	ROLLENKETTE, EINZELN CORRENTE DE ROLOS COM ANEL FECHADO	1			X	
25	EAM0125G98A	MACHINED SPROCKET 14 TEETH PIGNONE 14 DENTI LAVORATO ЗУБЧАТОЕ КОЛЕСО 14 ЗУБЦОВ ОБРАБОТКИ	PIGNON 14 DENTS USINE PIÑÓN 14 DIENTES TRABAJADO	RITZEL 14 ZÄHNE, VERARBEITET PINHÃO 14 DENTES TRABALHADO	1			X	
26	EAM0147G60A	MACHINED SPROCKET 27 TEETH PIGNONE 27 DENTI LAVORATO ЗУБЧАТОЕ КОЛЕСО 27 ЗУБЦОВ ОБРАБОТКИ	PIGNON 27 DENTS USINE PIÑÓN 27 DIENTES TRABAJADO	RITZEL 27 ZÄHNE, VERARBEITET PINHÃO 27 DENTES TRABALHADO	1			X	
27	EAM0180G16A	ENDSTROKE PLATE PIATTO FINECORSA ПЛАСТИНА КОНЦА ХОДА	PLATEAU FIN DE COURSE PLATO FINAL DE CARRERA	ENDLAGENPLATTE PRATO LIMITADOR DE CURSO	1			X	
28	EAK0330G92A	END STROKE FOR TOOL ARM KIT KIT FINE CORSA BRACCIO UTENSILE КОМПЛЕКТ КОНЦА ХОДА РЫЧАГА ИНСТРУМЕ	KIT FIN DE COURSE BRAS OUTIL KIT FINAL DE CARRERA BRAZO HERRAM.	SATZ ENDLAGE WERKZEUGARM KIT LIMITADOR DE CURSO BRAÇO FERRAM.	1			X	
29	EAS2208G05A	COVER POTENTIOMETER PROTEZIONE POTENZIOMETRO ЗАЩИТА ПОТЕНЦИОМЕТРА	PROTECTION POTENTIOMETRE PROTECCIÓN POTENCIÓMETRO	POTENTIOMETERABDECKUNG PROTEÇÃO POTENCIOMETRO	1			X	

A available - disponible - vorhanden - beschikbaar
disponibile - disponible - disponivel - Доступно

B on request - sur demande - auf Antrag - op aanvraag
a richiesta - a petición - no pedido - По запросу

C suggested - suggeré - vorgeschlagene - aanbevolen
consigliato - sugerido - sugerido - Предлагается

EAZ0122G57A.A

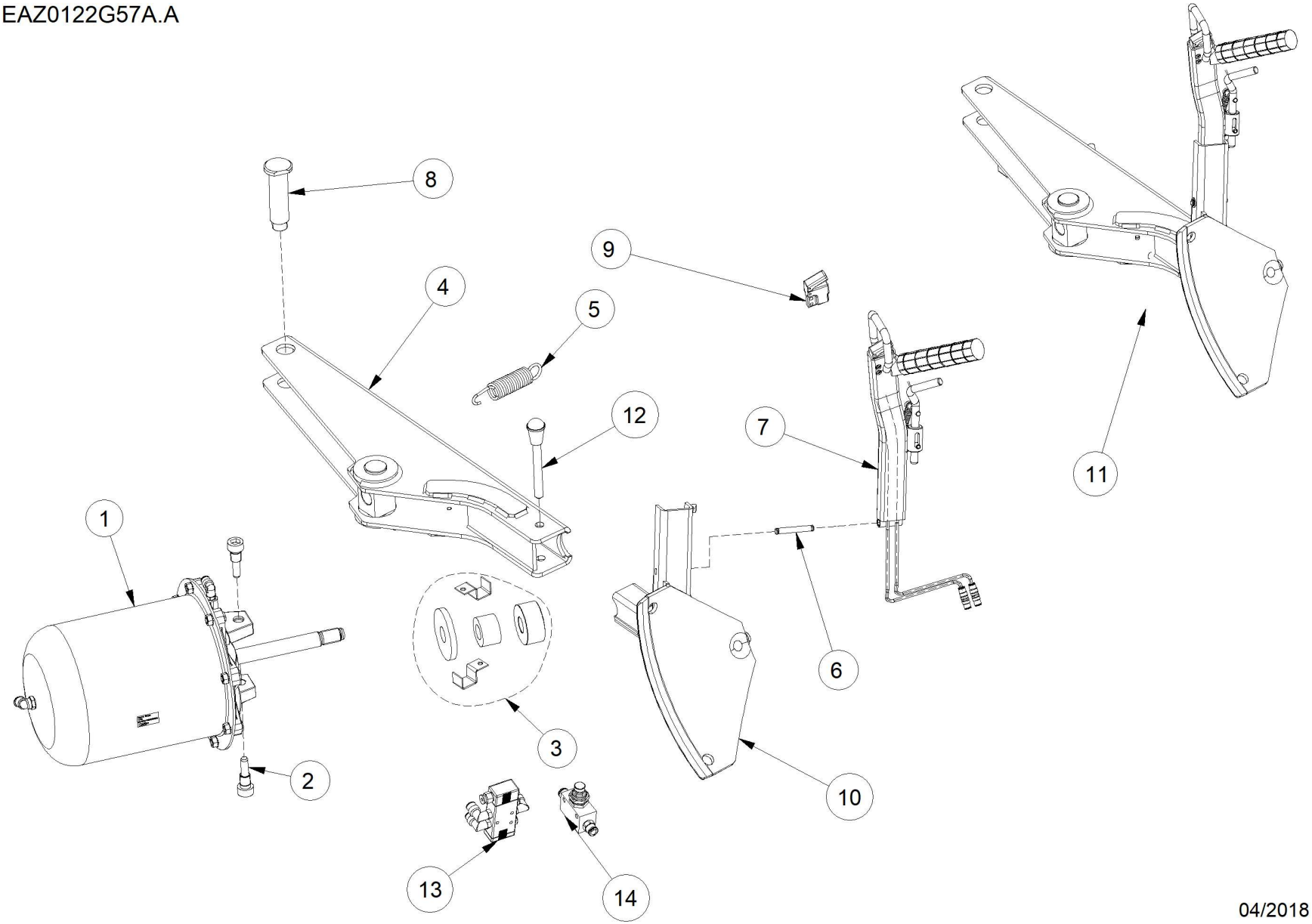

04/2018

Pos	Code	Designation Designazione ОПИСАНИЕ	Désignation Designaciòn	Bezeichnung Designação	N.	Note Nota HOTa	A	B	C
1	EAA0425G08A	CYLINDER BEAD BREAKER CILINDRO STALLONATORE ЦИЛИНДР ОТБОРТОВЫВАТЕЛЯ	VERIN DETALLONEUR CILINDRO DESTALONADOR	ZYLINDER ABDRÜCKARM CILINDRO DESMONTADOR DE PNEUS	1		X		X
2	EAM0067G34A	SCREW,FITTING- CYLINDER B/BREAK VITE FISSAGGIO CILINDRO STAL. БОЛТ ЦИЛИНДРА РАЗБОРТИРОВЩИКА	FIS FIXATION VERIN DETALONNEUR TORNILLO FIJACIÓN CIL.DESTALON.	SCHRAUBE PARAFUSO, JUNÇÃO - CIL.B/DISJUNTOR	2			X	
3	EAK0330G76A	SPACERS KIT KIT DISTANZIALI КОМПЛЕКТ РАСПОРНЫХ ВТУЛОК	KIT ENTRETOISES KIT SEPARADORES	SATZ DISTANZSTÜCKE KIT DISTANCIADORES	1			X	
4	EAS2154G70A	WELDED BB ARM SUPPORTO BRACCIO STALLONATORE ОПОР РЫЧАГА ОТБОРТОВЫВАТЕЛЯ	SUPPORT BRAS DETALONNEUR SOPORTE BRAZO DESTALONADOR	HALTERUNG ABDRÜCKARM SUPORTE BRAÇO DESMONTADO DE PNEUS	1			X	
5	EAM0067G69A	SPRING-RECALL ARM, BEAD BREAKER MOLLA RITORNO BRACCIO STALL. ПРУЖИНА ВОЗВРАТНАЯ РЫЧАГА	RESSORT RAPPEL BRAS DETALONNEUR MUELLE REGRESO BRAZO DESTAL.	RÜCKHOLFEDER F. ABDRÜCKARM MOLA RETORNO BRAÇO DESM. PNEU	1			X	
6	EAM0117G64A	HINGE PIN, BEAD BREAKER PERNO CERNIERA ШТИФТ ШАРНИРНОГО СОЕДИНЕНИЯ	PIVOT CHARNIERE PERNO BISAGRA	SCHARNIERSTIFT, ABDRÜCKARM PINO DOBRADIÇA	1			X	
7	EAA0472G19A	BB HANDLE GROUP GRUPPO MANIGLIA BB УЗЕЛ РУКОЯТКИ BB	GROUPE POIGNEE BB GRUPO MANILLA BB	BAUGRUPPE BB-GRIFF PINO MANÍPULO BB	1			X	
8	EAM0116G72A	BEAD BREAKER ARM PIN PERNO BRACCIO STALLONATORE ШТИФТ РЫЧАГА ОТБОРТОВЫВАТЕЛЯ	PIVOT BRAS DETALLONEUR PERO BRAZO DESTALONADOR	STIFT ABDRÜCKARM PINO BRAÇO DESMONTADOR DE PNEUS	1			X	
9	1-33181A	MANUALLY OPERATED MICROVALVE VALVOLA КЛАПАН	VALVE VÁLVULA	MIKROVENTIL, MANUELL VÁLVULA	1		X		X
10	EAK0330G75A	BEADING ARM GROUP KIT KIT GRUPPO BRACCIO STALLONATORE КОМПЛЕКТ УЗЛА РЫЧАГА ОТБОРТОВЫВАТЕЛ	KIT GROUPE BRAS DETALONNEUR KIT GRUPO BRAZO DESTALONADOR	SATZ BAUGRUPPE ABDRÜCKARM KIT GRUPO BRAÇO DESMONTADOR DE PNEU	1			X	
11	EAA0425G10A	BEAD BREAKER GROUP GRUPPO STALLONATORE 8700 УЗЕЛ ОТБОРТОВЫВАТЕЛЯ 8700	GROUPE DETALONNEUR 8700 GRUPO DESTALONAR 8700	BAUGRUPPE ABDRÜCKARM GRUPO DESMONTADOR DE PNEUS	1			X	
12	EAA0328G72A	PIN - LOCK SPINA POSIZIONATRICE ПАЛЕЦ ФИКСАТОР	GOUPILLE DE REGLAGE ESPINA DE REGLAJE	POSITIONIERSTIFT PINO POSICIONADOR	1			X	
13	EAA0408G81A	BEAD BREAKER VALVE GROUP GRUPPO VALVOLA STALLONATORE ГРУППА КЛАПАНОВ РАЗБОРТИРОВЩИКА	GROUPE VALVE DETALONNEUR GRUPO VÁLVULA DESTALONADOR	ABDRÜCKVENTILEINHEIT GRUPO VÁLVULA DESMONTADOR DE PNEU	1		X		X
14	EAA0350G42A	VALVE + FITTING VALVOLA + RACCORDI КЛАПАН + ШТУЦЕР	SOUPAPE + RACCORD VÁLVULA + CONEXIÓN	VENTIL + ANSCHLUSS VÁLVULA + JUNÇÃO	1	1/4"	X		X

A available - disponible - vorhanden - beschikbaar
disponibile - disponible - disponivel - Доступно

B on request - sur demande - auf Antrag - op aanvraag
a richiesta - a petición - no pedido - По запросу

C suggested - suggeré - vorgeschlagene - aanbevolen
consigliato - sugerido - sugerido - Предлагается

EAZ0122G68A.B

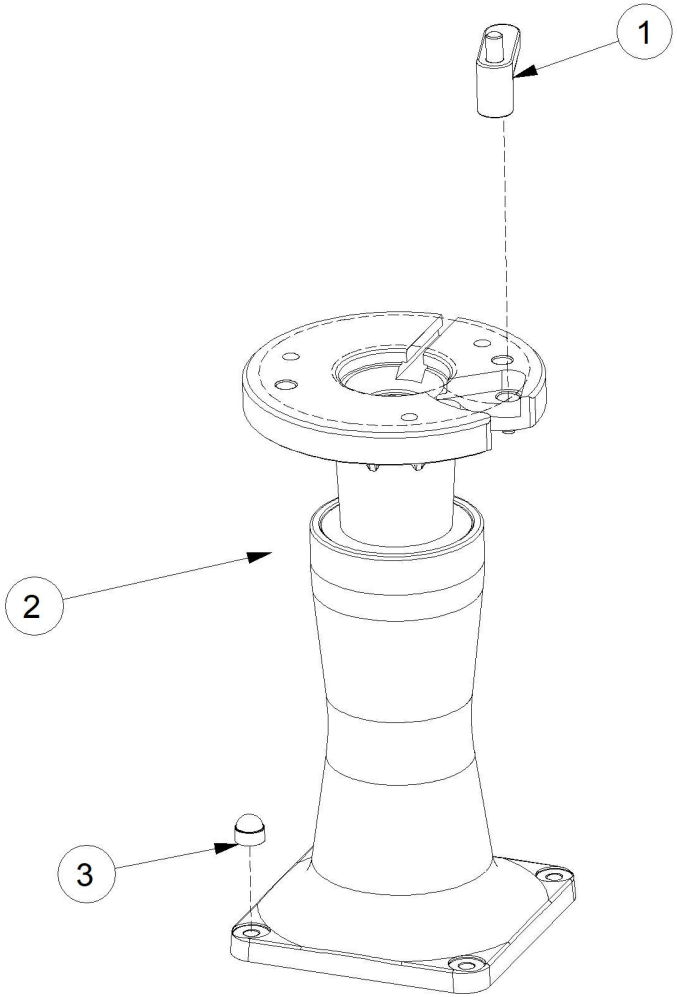

11/2018

Pos	Code	Designation Designazione ОПИСАНИЕ	Désignation Designaciòn	Bezeichnung Designação	N.	Note Nota HOTa	A	B	C
1	EAA0344G39A	ASSY, ANTI-ROTATION GRUPPO ANTIROTAZIONE КОМПЛЕКТ ПРОТИВОВРАЩЕНИЯ	JEU ANTI-ROTATION JUEGO ANTI-ROTACION	SATZ DREHSCHUTZ CONJUNTO ANTIROTAÇÃO	1			X	
2	EAA0371G59A	CENTER POST, ASSEMBLED SUPPORTO RUOTA COMPLETO ОПОРА КОЛЕСА В СБОРЕ	SUPPORT ROUE COMPLET SOPORTE RUEDA COMPLETO	MITTENHALTER, MONTIERT SUPORTE RODA COMPLETO	1			X	
3	EAC0113G74A	PROTECTION NUT PROTEZIONE DADO ЗАЩИТА ГАЙКА	PROTECTION ECROU PROTECCIÓN TUERCA	SCHUTZ MUTTER PROTEÇÃO PORCA	6	M 10	X		

A available - disponible - vorhanden - beschikbaar
disponibile - disponible - disponivel - Доступно

B on request - sur demande - auf Antrag - op aanvraag
a richiesta - a petición - no pedido - По запросу

C suggested - suggeré - vorgeschlagene - aanbevolen
consigliato - sugerido - sugerido - Предлагается

EAZ0122G77A.A

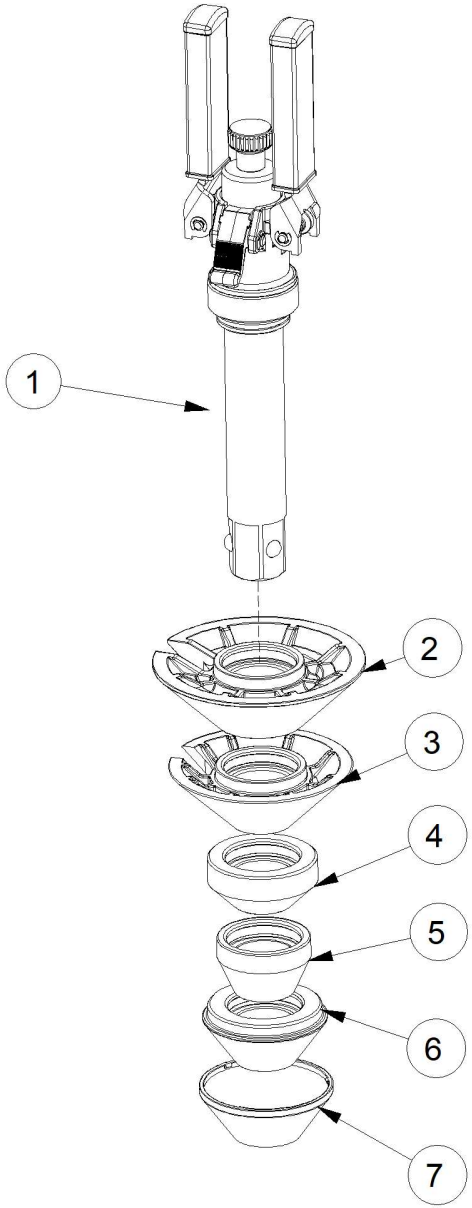

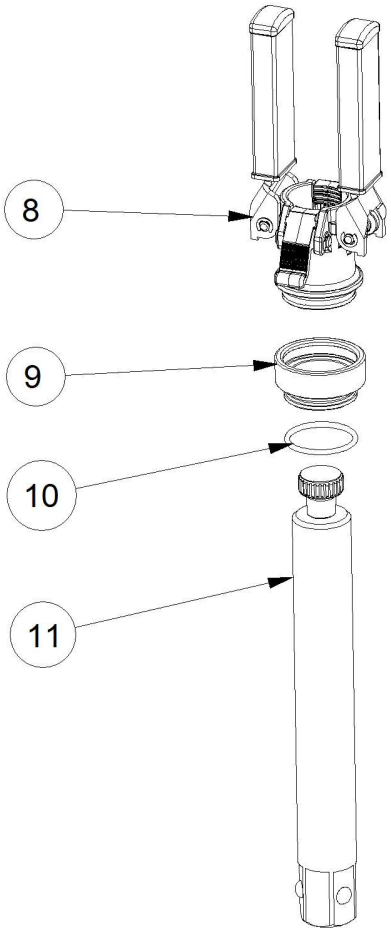

04/2018

Pos	Code	Designation Designazione ОПИСАНИЕ	Désignation Designaciòn	Bezeichnung Designação	N.	Note Nota HOTa	A	B	C
1	EAA0481G58A	LOCKING SHAFT MANUAL ALBERO PER BLOCCAGGIO MANUALE ВАЛ ДЛЯ БЛОКИРОВКИ ВРУЧНУЮ	ARBRE BLOCAGE MANUELLE ÁRBOL DE BLOQUEO MANUAL	WELLE FÜR MANUELLE AUFSPANNUNG EIXO PARA BLOQUEIO MANUAL	1			X	
2	EAC0102G25A	REDUCTION CONE CONO RIDUZIONE КОНУС	CONE REDUCTION CONO REDUCCIÓN	REDUZIERKEGEL CONE REDUÇÃO	1	D145	X		X
3	EAC0099G40A	REDUCTION CONE CONO RIDUZIONE КОНУС	CONE REDUCTION CONO REDUCCIÓN	REDUZIERKEGEL CONE REDUÇÃO	1	D120	X		X
4	EAM0058G07A	REDUCTION CONE CONO RIDUZIONE КОНУС	CONE REDUCTION CONO REDUCCIÓN	REDUZIERKEGEL CONE REDUÇÃO	1	D78	X		X
5	EAM0058G12A	REDUCTION CONE CONO RIDUZIONE КОНУС	CONE REDUCTION CONO REDUCCIÓN	REDUZIERKEGEL CONE REDUÇÃO	1	D64	X		X
6	EAM0117G47A	D.85 mm STEEL CLAMPING CONE CONO DI BLOCCAGGIO D.85 IN ACCIAIO СТАЛЬНОЙ ЗАЖИМНОЙ КОНУС, Д.0,85 мм	CÔNE DE BLOCAGE D.85 EN ACIER CONO DE BLOQUEO D.85mm DE ACERO	SPANNKEGEL AUS STAHL D.85 CONE DE BLOQUEIO D.85 EM AÇO	1	D.85 mm	X		X
7	EAK0317G32A	D.85 mm CONES + PROTEC KIT KIT CONO D.85 mm + PROTEZIONI КОМПЛЕКТ КОНУС Д. 85 мм + ЗАЩИТА	KIT CONE D.85 mm + PROTECTIONS KIT CONO D.85 mm + PROTECCIONES	SATZ KEGEL + SCHUTZ D. 85 mm KIT CONE D.85 mm + PROTEÇÕES	1		X		
8	EAA0348G20A	QUICK NUT GHIERA RAPIDA БЫСТРОЗАЖИМНАЯ ГАЙКА	SERRAGE RAPIDE ABRAZADERA RÁPIDA	SCHNELLRING ARO RÁPIDO	1			X	
9	EAC0115G28A	NUT EXTENSION PROLUNGA GHIERA x OR ST.2054 УДЛИНИТЕЛЬ ГАЙКА	RALLONGE ECROU DE SERRAGE PROLONGADOR SUNCHO	VERLAENGERUNG SCHNELLEANSCHLUSS EXTENSÃO ARO	1			X	
10	8-19814A	OR SEAL GUARNIZIONE OR КОЛЬЦО	JOINT OR GUARNICION OR	SICHERUNG OR GAXETA OR	1	42,86x3,53 OR147		X	
11	EAA0344G40A	SHAFT WHEEL STOP ALBERO BLOCCAGGIO RUOTA ОГРАНИЧИТЕЛЬ КОЛЕСА ВАЛА	ARBRE BLOCAGE ROUE ÁRBOL BLOQUEO RUEDA	WELLE RAD-BLOCKIERUNG EIXO BLOQUEIO RODA	1			X	

A available - disponible - vorhanden - beschikbaar
disponibile - disponible - disponivel - Доступно

B on request - sur demande - auf Antrag - op aanvraag
a richiesta - a petición - no pedido - По запросу

C suggested - suggeré - vorgeschlagene - aanbevolen
consigliato - sugerido - sugerido - Предлагается

EAZ0137G83A

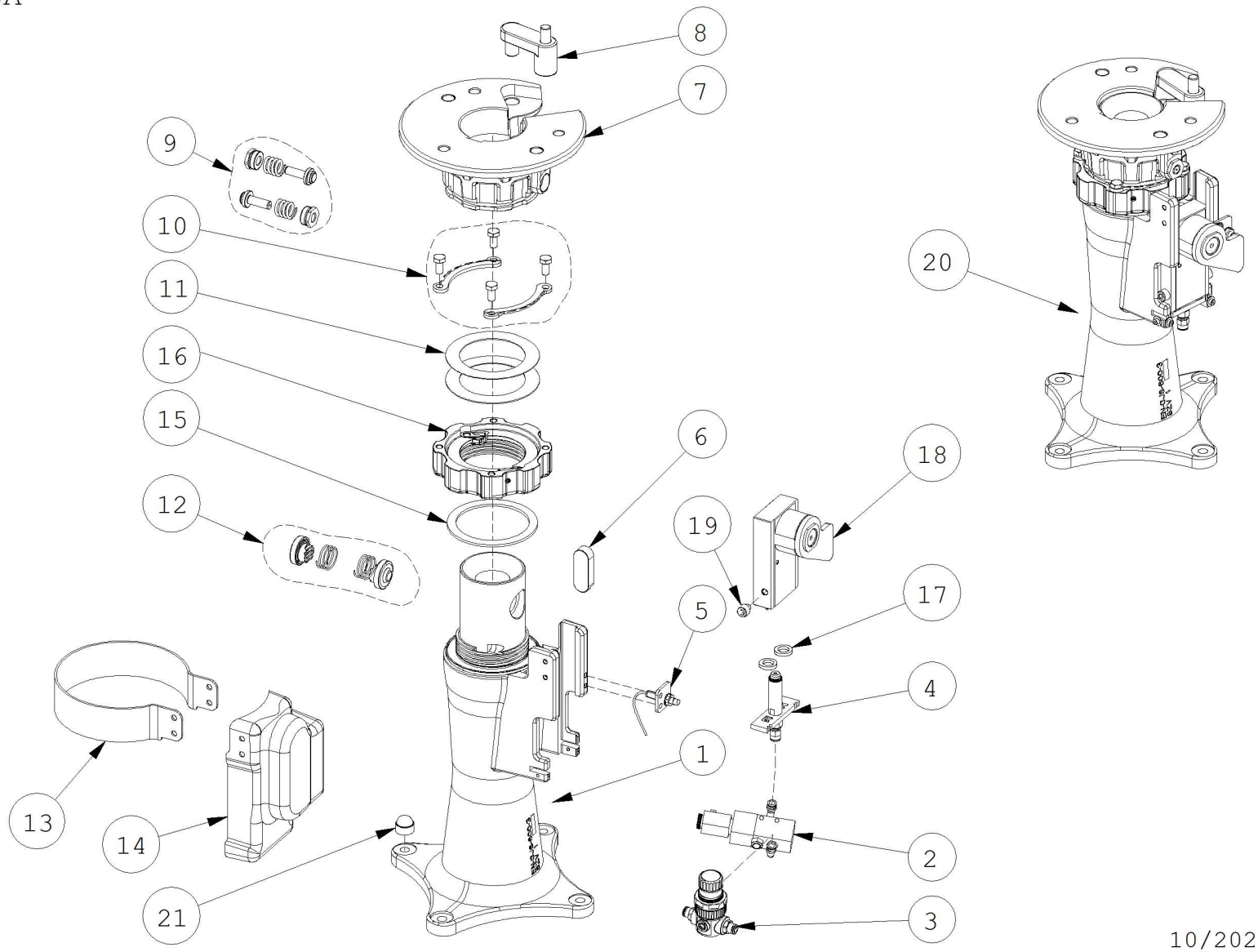

10/2020

Pos	Code	Designation Designazione ОПИСАНИЕ	Désignation Designaciòn	Bezeichnung Designação	N.	Note Nota HOTa	A	B	C
1	EAA0502G89A	CENTER POST ASSEMBLY GRUPPO CENTERPOST УЗЕЛ CENTERPOST	GROUPE CENTERPOST GRUPO CENTERPOST	BAUGRUPPE MITTENSTANGE GRUPO CENTERPOST	1		X		
2	EAA0425G80A	ASSY 5/2 WAY SOL. VALVE, G1/8 MONOST. GRUPPO ELETTROVALVOLA 5/2,G1/8 MONOS УЗЕЛ ЭЛЕКТРОКЛАПАНА 5/2,G1/8 С ОДНИМ У	GROUPE ELECTROVANNE 5/2,G1/8 MONOST. GRUPO ELECTROVÁLVULA 5/2,G1/8 MONOST.	BAUGRUPPE 5/2-WEG MAGNETVENTIL, G1/8 M GRUPO ELETROVÁLVULA 5/2,G1/8 MONOEST.	1		X		x
3	EAA0490G90A	FLOW REGULATION VALVE+FITTINGS VALVOLA REGOLATR. FLUSSO UNIDIR.+RAC КЛАПАН-РЕГУЛЯТОР ПОТОКА	VANNE REGUL. FLUX UNIDIR. + RACCORDS VÁLVULA REGUL. FLUJO UNIDIREC.+RACOR	FLUSSREGLERVENTIL+BEFESTIGUNGSMATEF VÁLVULA REGUL. FLUXO UNIDIR. + RACC.	1		X		
4	EAA0490G42A	ASSEMBLED NOZZLE GROUP GRUPPO PRE-ASSEMBLATO UGELLO SLITTA СОПЛО В СБОРЕ	GROUPE PRÉ-ASSEMBLÉ BUSE COULISSE GRUPO PREMONTADO BOQUILLA CORREDER	VORMONTIERTE EINHEIT DÜSE SCHLITTEN GRUPO PRÉ MONTADO BICO DE SOPRO RAM	1		X		X
5	EAK0375G05A	PROXIMITY + SUPPORT KIT KIT PROXIMITY + SUPPORTO ДАТЧИКА PROXIMITY + ОПОРА	CAPTEUR DE PROXIMITE + SUPPORT SENSOR PROXIMITY + SOPORTE	PROXIMITY SENSOR + HALTER SENSOR PROXIMITY + SUPORTE	1		X		
6	EAM0101G15A	STOPPING FLAT KEY LINGUETTA D'ARRESTO ШПОНКА ЗАЖИМНОЕ	LANGUETTE DE BLOCAGE LENGUETA DE BLOQ.	HALTERFEDER LINGUETA DE BLOQ.	1			X	
7	EAA0472G61A	WHEEL POSITIONING ASSY. GRUPPO DI POSIZIONAMENTO RUOTA. УЗЕЛ РАЗМЕЩЕНИЯ КОЛЕСА	GROUPE DE POSITIONNEMENT ROUE GRUPO DE POSICIONAMIENTO RUEDA	RADPOSITIONIERUNGSBAUGRUPPE GRUPO DE POSICIONAMENTO RODA	1			X	
8	EAA0344G39A	ASSY, ANTI-ROTATION GRUPPO ANTIROTAZIONE КОМПЛЕКТ ПРОТИВОВРАЩЕНИЯ	JEU ANTI-ROTATION JUEGO ANTI-ROTACION	SATZ DREHSCHUTZ CONJUNTO ANTIROTAÇÃO	1			X	
9	EAK0316G34A	WEDGES KIT KIT CUNEI КОМПЛЕКТ КУЛАЧОК	KIT COINS KIT CUÑAS	KEILENSATZ KIT CUNHAS	1			X	
10	EAK0317G05A	KIT RETAINER TOP PLATE KIT BLOCCAGGIO FLANGIA SUPERIORE КОМПЛЕКТ ФИКСАТОРА ФЛАНЦА	GROUPE ONDULEUR KIT BLOQUEO BRIDA SUPERIOR	BEFESTIGUNGSSATZ OBERER FLANSCH KIT FIXAÇÃO FLANGE SUPERIOR	1			X	
11	EAM0103G26A	SPACER DISTANZIALE ВТУЛКА	ENTRETOISE SEPARADOR	DISTANZSTÜCK DISTANCIADOR	2			X	
12	EAK0330G52A	INNER THREADED CURSOR KIT KIT CURSORI DI BLOCCAGGIO КОМПЛЕКТ ВНУТРЕННЕГО РЕЗЬБОВОГО ПОЛ	KIT CURSEURS DE BLOCAGE KIT CURSORES DE BLOQUEO	BEFETIUNGSSATZ MARKEN KIT CURSORES DE FIXAÇÃO	1			X	
13	EAS2238G22A	LOCKING NUT COVER COPERTURA GHIERA DI BLOCAGGIO КОЖУХ СТОПОРНАЯ ГАЙКА	COUVERTURE ECROU DE SERRAGE COBERTURA ABRAZADERA DE FIJACIÓN	KONTERMUTTER ABDECKUNG COBERTURA ARO DE FIXAÇÃO	1			X	
14	EAC0127G32A	SLIDING ROLLER COVER CARTER SLITTA КОЖУХ ТЕЛЕЖКИ	CARTER COULISSEAU CÁRTER CORREDERA	SCHIEBERABDECKUNG CÁRTER DESLIZADOR	1			X	
15	EAM0154G32A	DAMPING WASHER RONDELLA SMORZANTE ШАЙБА	RONDELLE ARANDELA	SCHEIBE ARRUELA	1		X		x
16	EAA0523G13A	LOCKING NUT GROUP GRUPPO GHIERA DI BLOCCAGGIO ГРУППА КОНТРГАЙКА	KIT ECROU DE BLOCAGE GRUPO TUERCA BLOQ	SICHERUNGSMUTTER GRUPO PORCA BLOQUEADORA	1			X	
17	EAM0153G89A	DUMP.WASHER RONDELLA ШАЙБА	RONDELLE ARANDELA	UNTERLEGSCHEIBE ARRUELA	2	ADIPOL 90 30%		X	

A available - disponible - vorhanden - beschikbaar
disponibile - disponible - disponivel - Доступно

B on request - sur demande - auf Antrag - op aanvraag
a richiesta - a petición - no pedido - По запросу

C suggested - suggeré - vorgeschlagene - aanbevolen
consigliato - sugerido - sugerido - Предлагается

Pos	Code	Designation Designazione ОПИСАНИЕ	Désignation Designaciòn	Bezeichnung Designação	N.	Note Nota HOTa	A	B	C
18	EAA0490G68A	TORQUE CONTROL ASSEMBLY GRUPPO DI CONTROLLO BLOCCAGGIO УЗЕЛ УПРАВЛЕНИЯ БЛОКИРОВКОЙ	GROUPE DE CONTROLE BLOCAGE TORQUE CONTROL ASSEMBLY	GRUPPE ANZUGSMOMENTKONTROLLE GRUPO DE CONTROLE BLOQUEIO	1		X		
19	EAM0141G83A	CUT M8 SCREW VITE M8 LAVORATA БОЛТ M8 ОБРАБОТАННЫЙ	VIS M8 USINEE TORNILLO M8 TRABAJADO	M8-SCHRAUBE, BEARBEITET PARAFUSO M8 TABALHADO	2			X	
20	EAA0502G90A	CENTER POST ASSEMBLY VA GRUPPO CENTERPOST VA УЗЕЛ CENTERPOST VA	GROUPE CENTERPOST VA CENTER POST ASSEMBLY VA	BAUGRUPPE MITTENSTANGE VA GRUPO CENTERPOST VAI	1			X	
21	EAC0113G74A	PROTECTION NUT PROTEZIONE DADO ЗАЩИТА ГАЙКА	PROTECTION ECROU PROTECCIÓN TUERCA	SCHUTZ MUTTER PROTEÇÃO PORCA	6	M 10	X		

A available - disponible - vorhanden - beschikbaar
disponibile - disponible - disponivel - Доступно

B on request - sur demande - auf Antrag - op aanvraag
a richiesta - a petición - no pedido - По запросу

C suggested - suggeré - vorgeschlagene - aanbevolen
consigliato - sugerido - sugerido - Предлагается

EAZ0122G80A.B

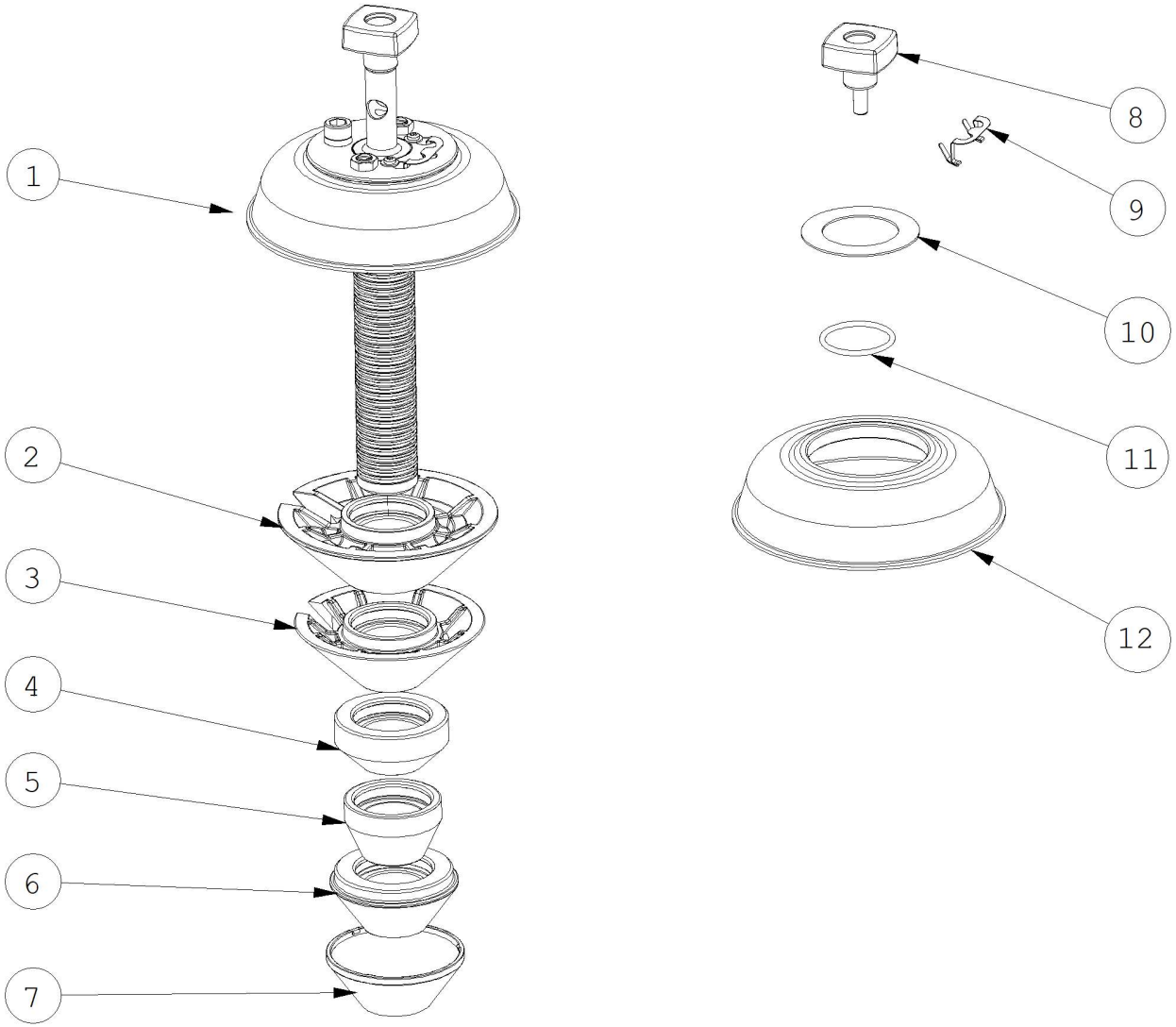

01/2019

Pos	Code	Designation Designazione ОПИСАНИЕ	Désignation Designaciòn	Bezeichnung Designação	N.	Note Nota HOTa	A	B	C
1	EAA0490G38A	LOCKING DEVICE DISPOSITIVO BLOCCAGGIO ВАЛ БЛОКИРОВКИ	ARBRE DE BLOCAGE EJE DE BLOQUEO	BEFESTIGUNG WELLE EIXO DE BLOQUEIO	1	QUICKLOK		X	
2	EAC0102G25A	REDUCTION CONE CONO RIDUZIONE КОНУС	CONE REDUCTION CONO REDUCCIÓN	REDUZIERKEGEL CONE REDUÇÃO	1	D145	X		X
3	EAC0099G40A	REDUCTION CONE CONO RIDUZIONE КОНУС	CONE REDUCTION CONO REDUCCIÓN	REDUZIERKEGEL CONE REDUÇÃO	1	D120	X		X
4	EAM0058G07A	REDUCTION CONE CONO RIDUZIONE КОНУС	CONE REDUCTION CONO REDUCCIÓN	REDUZIERKEGEL CONE REDUÇÃO	1	D78	X		X
5	EAM0058G12A	REDUCTION CONE CONO RIDUZIONE КОНУС	CONE REDUCTION CONO REDUCCIÓN	REDUZIERKEGEL CONE REDUÇÃO	1	D64	X		X
6	EAM0117G47A	D.85 mm STEEL CLAMPING CONE CONO DI BLOCCAGGIO D.85 IN ACCIAIO СТАЛЬНОЙ ЗАЖИМНОЙ КОНУС, Д.0,85 мм	CÔNE DE BLOCAGE D.85 EN ACIER CONO DE BLOQUEO D.85mm DE ACERO	SPANNKEGEL AUS STAHL D.85 CONE DE BLOQUEIO D.85 EM AÇO	1	D.85 mm	X		X
7	EAK0317G32A	D.85 mm CONES + PROTEC KIT KIT CONO D.85 mm + PROTEZIONI КОМПЛЕКТ КОНУС Д. 85 мм + ЗАЩИТА	KIT CONE D.85 mm + PROTECTIONS KIT CONO D.85 mm + PROTECCIONES	SATZ KEGEL + SCHUTZ D. 85 mm KIT CONE D.85 mm + PROTEÇÕES	1		X		X
8	1-02912A	KNOB POMELLO БАРАШЕК	POMMEAU POMO	KNAUF BOTÃO	1			X	
9	EAM0102G51A	SPRING MOLLA ПРУЖИНА	RESSORT MUELLE	FEDER MOLA	1			X	
10	EAM0102G49A	WASHER RONDELLA ШАЙБА	RONDELLE ARANDELA	UNTERLEGSCHEIBE ARRUELA	1			X	
11	8-19814A	OR SEAL GUARNIZIONE OR КОЛЬЦО	JOINT OR GUARNICION OR	SICHERUNG OR GAXETA OR	1	42,86x3,53 OR147		X	
12	EAC0126G29A	PROTECTION FOR LOCKING SHAFT PROTEZIONE ALBERO DI BLOCCAGGIO ЗАЩИТА ВАЛ БЛОКИРОВКИ	PROTECTION ARBRE DE BLOCAGE PROTECCIÓN EJE DE BLOQUEO	SCHUTZ SPANNVORRICHTUNG PROTEÇÃO EIXO DE BLOQUEIO	1		X		x

A available - disponible - vorhanden - beschikbaar
disponibile - disponible - disponivel - Доступно

B on request - sur demande - auf Antrag - op aanvraag
a richiesta - a petición - no pedido - По запросу

C suggested - suggeré - vorgeschlagene - aanbevolen
consigliato - sugerido - sugerido - Предлагается

EAZ0122G69A.B

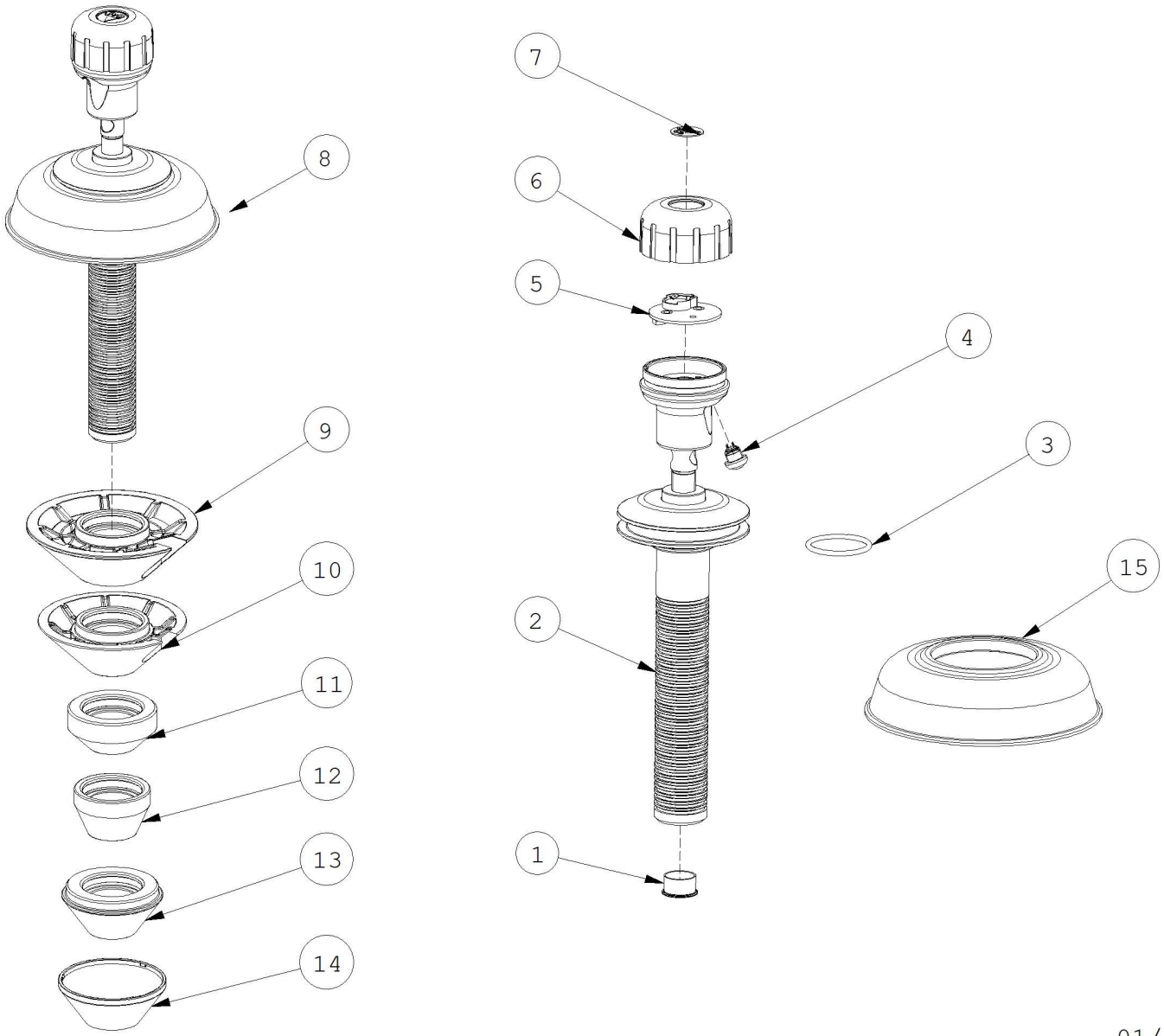

01/2019

Pos	Code	Designation Designazione ОПИСАНИЕ	Désignation Designaciòn	Bezeichnung Designação	N.	Note Nota HOTa	A	B	C
1	EAM0116G98A	CAP WITH HOLE TAPPO CON FORO ЗАГЛУШКА	BOUCHON TAPÓN	STOPFEN TAMPA	1			X	
2	EAK0341G36A	THREADED SHAFT OF RF DEVICE KIT KIT ALBERO FILETTATO DEL DISPOSITIVO RF КОМПЛЕКТ ВАЛА С РЕЗЬБОЙ С УСТРОЙСТВС	KIT ARBRE FILETE DU DISPOSITIF RF KIT EJE ROSCADO DEL DISPOSITIVO RF	GEWINDESCHAFT DER RF-VORRICHTUNG KIT EIXO ROSQUEADO DO DISPOSITIVO RF	1		X		
3	8-19814A	OR SEAL GUARNIZIONE OR КОЛЬЦО	JOINT OR GUARNICION OR	SICHERUNG OR GAXETA OR	1	42,86x3,53 OR147		X	
4	EAW0286G31A	WIRED PUSH BUTTON PULSANTE CABLATO КНОПКА С ПРОВОДКОЙ	BOUTON CABLE BOTÓN CABLEADO	TASTE, VERKABELT BOTÃO CABEADO	1		X		x
5	EAP0299G40A	REMOTE TX 868 BOARD SCHEDA TRASMETTITORE СХЕМА ПЕРЕДАТЧИКА	CARTE EMETTEUR TARJETA TRASMISOR	SENDERPLATINE FICHA TRANSMISSORA	1		X		x
6	EAM0126G60A	UPPER COVER COPERCHIO ALBERO КРЫШКА ВАЛА	COUVERCLE ARBRE TAPA EJE	ABDECKUNG FUNKFERNGEST. SPANNVORR. TAMPA EIXO	1	WIRELESS	X		x
7	EAL0462G80A	BUTTON INDICATOR LABEL ETICHETTA INDICATORE PULSANTE ЭТИКЕТКА ИНДИКАТОРА КНОПКИ	ETIQUETTE INDICATEUR BOUTON ETIQUETA INDICADOR BOTÓN	ETIKETT TASTENZEIGER ETIQUETA INDICADOR BOTÃO	1			X	
8	EAA0490G39A	WIRELESS LOCKING DEVICE ASSY ALBERO DI BLOCCAGGIO A COMANDO RADIC ВАЛ БЛОКИРОВКИ РАДИОУПРАВЛЕНИЯ	ARBRE DE BLOCAGE A COMMANDE RADIO EJE DE BLOQUEO CON MANDO RADIO	SPANNVORRICHTUNG, FUNKFERNGESTEUER EIXO DE BLOQUEIO A COMANDO DE RÁDIO	1	WIRELESS	X		
9	EAC0102G25A	REDUCTION CONE CONO RIDUZIONE КОНУС	CONE REDUCTION CONO REDUCCIÓN	REDUZIERKEGEL CONE REDUÇÃO	1	D145	X		x
10	EAC0099G40A	REDUCTION CONE CONO RIDUZIONE КОНУС	CONE REDUCTION CONO REDUCCIÓN	REDUZIERKEGEL CONE REDUÇÃO	1	D120	X		x
11	EAM0058G07A	REDUCTION CONE CONO RIDUZIONE КОНУС	CONE REDUCTION CONO REDUCCIÓN	REDUZIERKEGEL CONE REDUÇÃO	1	D78	X		x
12	EAM0058G12A	REDUCTION CONE CONO RIDUZIONE КОНУС	CONE REDUCTION CONO REDUCCIÓN	REDUZIERKEGEL CONE REDUÇÃO	1	D64	X		x
13	EAM0117G47A	D.85 mm STEEL CLAMPING CONE CONO DI BLOCCAGGIO D.85 IN ACCIAIO СТАЛЬНОЙ ЗАЖИМНОЙ КОНУС, Д.0,85 мм	CÔNE DE BLOCAGE D.85 EN ACIER CONO DE BLOQUEO D.85mm DE ACERO	SPANNKEGEL AUS STAHL D.85 CONE DE BLOQUEIO D.85 EM AÇO	1	D.85 mm	X		x
14	EAK0317G33A	KIT PLASTIC PROTECTORS CONE D.85MM KIT PROTEZIONI CONO BLOCC. D.85MM КОМПЛЕКТ ЗАЩИТЫ КОНУСА БЛОКИРОВКИ Д	KIT PROTECTIONS CONES DE BLOC. D85 MM KIT PROTECCIONES CONO BLOQUEO D.85MM	SATZ SPANNKEGELSCHUTZ D. 85 mm KIT PROTEÇÕES CONE BLOQUE. D.85MM	1		X		x
15	EAC0126G29A	PROTECTION FOR LOCKING SHAFT PROTEZIONE ALBERO DI BLOCCAGGIO ЗАЩИТА ВАЛ БЛОКИРОВКИ	PROTECTION ARBRE DE BLOCAGE PROTECCIÓN EJE DE BLOQUEO	SCHUTZ SPANNVORRICHTUNG PROTEÇÃO EIXO DE BLOQUEIO	1		X		x

A available - disponible - vorhanden - beschikbaar
disponibile - disponible - disponivel - Доступно

B on request - sur demande - auf Antrag - op aanvraag
a richiesta - a petición - no pedido - По запросу

C suggested - suggeré - vorgeschlagene - aanbevolen
consigliato - sugerido - sugerido - Предлагается

EAZ0138G09A.A

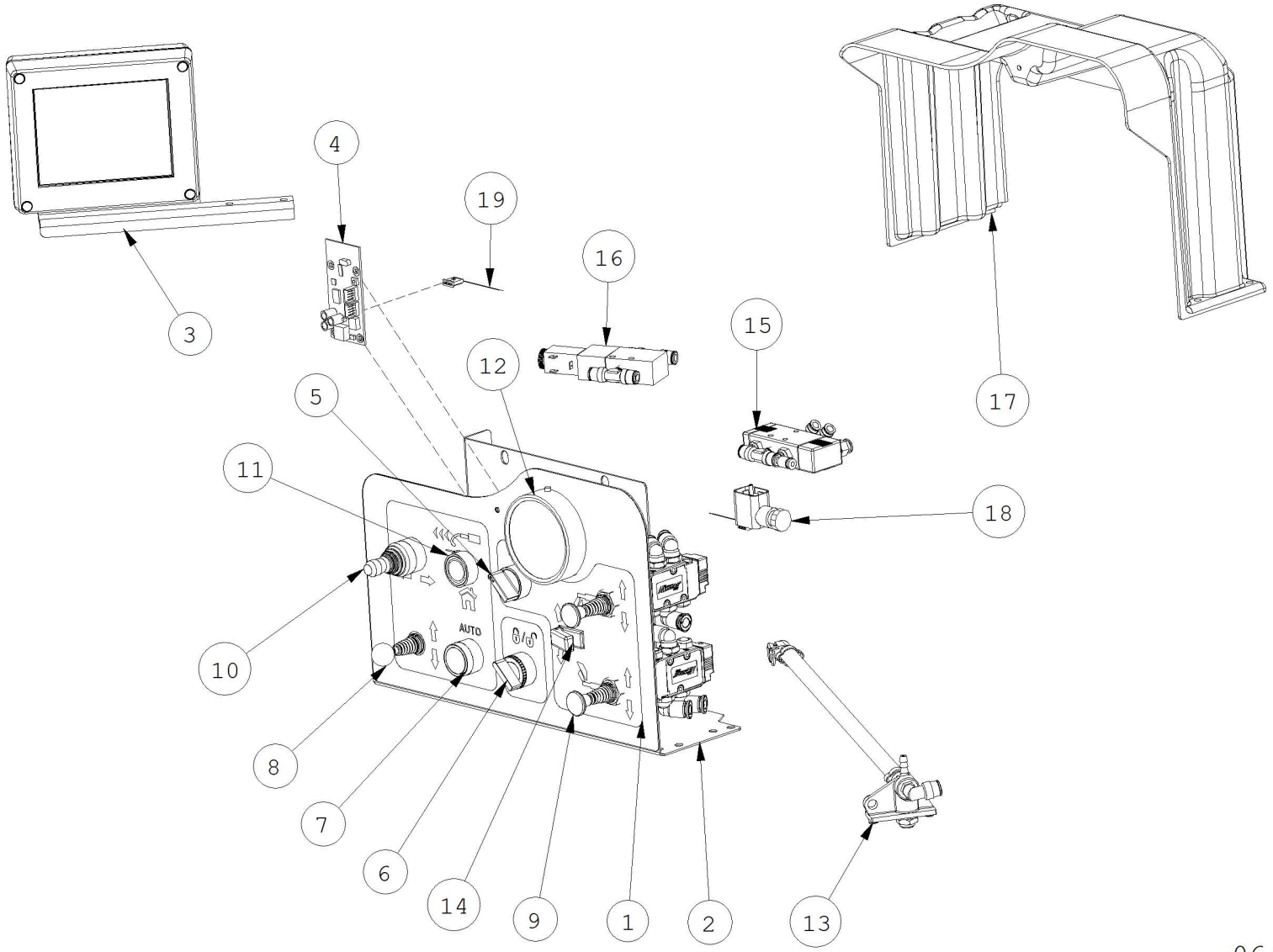

06/2020

Pos	Code	Designation Designazione ОПИСАНИЕ	Désignation Designaciòn	Bezeichnung Designação	N.	Note Nota HOTa	A	B	C
1	EAL0467G29A	LABEL, CONTROL PANEL - AUTO. LOCK ETICHETTA PANNELLO DI CONTROLLO - AUT ЭТИКЕТКА ПАНЕЛИ УПРАВЛЕНИЯ	ETIQUETTE PANNEAU DE COMMANDE ETIQUETA PANEL DE CONTROL	ETIKETT STEUERTAFEL ETIQUETA PAINEL DE CONTROLE	1	Manual Clamp		X	
1	EAL0467G30A	LABEL, CONTROL PANEL - MANUAL LOCK ETICHETTA PANNELLO DI CONTROLLO - MAN ЭТИКЕТКА ПАНЕЛИ УПРАВЛЕНИЯ	ETIQUETTE PANNEAU DE COMMANDE ETIQUETA PANEL DE CONTROL	ETIKETT STEUERTAFEL ETIQUETA PAINEL DE CONTROLE	1	quickLOK		X	
2	EAS2228G25A	SHEET METAL, CONSOLLE SUPPORT LAMIERA SUPPORTO MANIPOLATORE ОПОРА КОНСОЛИ	SUPPORT CONSOLE SOPORTE CONSOLA	KONSOLENSTÜTZE SUPORTE CONSOLE	1			X	
3	EAA0481G19A	MONITOR WITH SUPPORT MONITOR CON SUPPORTO МОНИТОР С ОПОРОЙ	ECRAN AVEC SUPPORT MONITOR CON SOPORTE	MONITOR MIT STÜTZE MONITOR COM SUPORTE	1	Optional		X	
4	EAP0299G50A	REMOTE RX BOARD SCHEDA RICEVITORE СХЕМА ПРИЕМНИКА	CARTE RECEPTEUR TARJETA RECEPTOR	EMPFÄNGERPLATINE FICHA RECEBEDOR	1	quickLOK - Radio	X		
5	EAA0507G56A	TWO POSITION SWITCH ASSY GRUPPO COMMUTATORE A 2 POSIZIONI ВЫКЛЮЧАТЕЛЬ 2-ПОЗИЦИОННЫЙ В СБОРЕ	COMMUTATEUR 2 POS. CONMUTADOR 2 POS.	UMSCHALTER 2 POS. CONJUNTO COMUTADOR A 2 POSIÇOES NC	1			X	
6	EAA0507G53A	2-POSITION SELECTOR ASSY GRUPPO SELETTORE A 2 POSIZIONI УЗЕЛ 2-Х ПОЗИЦИОННОГО ПЕРЕКЛЮЧАТЕЛЯ	GROUPE SELECTEUR A 2 POSITIONS GRUO SELECTOR 2 POSICIONES	BAUGRUPPE WAHLSCHALTER MIT 2 POS. GRUPO SELETOR A 2 POSIÇÕES	1	quickLOK		X	
7	EAA0507G52A	WHITE LED BUTTON FOR AUTO SERVICE TASTO LED BIANCHI PER SERVIZIO AUTO БЕЛАЯ СВЕТОДИОДНАЯ КНОПКА ДЛЯ ОБСЛУ	TOUCHE LED BLANCS POUR SEVICE AUTO TECLA LEDES BLANCOS PARA SERVICIO AUT	WEISSE LED-TASTE FÜR AUTOSERVICE BOTÃO LED BRANCOS PARA SERVIÇO AUTO	1			X	
8	EAA0440G68A	VALVE WITH ELBOW FITTING VALVOLA CON RACCORDI КЛАПАН СО ШТУЦЕРАМИ	VALVE AVEC RACCORDS VÁLVULA CON RACORES	VENTIL MIT WINKEL-BEFESTIGUNGSMATERIA VÁLVULA COM JUNÇOES	1		X		
9	EAA0350G58A	VALVE VALVOLA КЛАПАН	SOUPAPE VÁLVULA	VENTIL VÁLVULA	1		X		
10	2-13658A	JOYSTICK, 2 POSITIONS, 48MM SHAFT JOYSTICK 2 POSIZIONI, ALBERO 48MM ДЖОЙСТИК, 2 ПОЛОЖЕНИЯ, 48ММ ВАЛ	JOYSTICK 2 POSITIONS, ARBRE 48MM JOYSTICK 2 POSICIONES, ÁRBOL 48MM	JOYSTICK, 2 STELLUNGEN, SCHAFT 48 MM JOYSTICK 2 POSICOES, EIXO 48MM	1		X		
11	EAA0507G51A	GREEN PUSH BUTTON ASSY GRUPPO TASTO VERDE УЗЕЛ ЗЕЛЕНОЙ КНОПКИ	GROUPE TOUCHE VERTE GRUPO TECLA VERDE	BAUGRUPPE GRÜNE TASTE GRUPO BOTÃO VERDE	1			X	
12	EAA0426G72A	MANOMETER GROUP GRUPPO MANOMETRO УЗЕЛ МАНОМЕТРА	GROUPE MANOMETRE GRUO MANÓMETRO	MANOMETERGRUPPE GRUPO MANÔMETRO	1			X	
13	EAA0426G89A	INFLATION GAUGE UNITA' DI GONFIAGGIO УЗЕЛ НАКАЧИВАНИЯ	UNITE DE GONFLAGE UNIDAD DE INFLADO	FÜLLEINHEIT UNIDADE DE ENCHIMENTO	1			X	
13	EAA0503G02A	INFLATION GAUGE UNITA' DI GONFIAGGIO УЗЕЛ НАКАЧИВАНИЯ	UNITE DE GONFLAGE UNIDAD DE INFLADO	FÜLLEINHEIT UNIDADE DE ENCHIMENTO	1	HD		X	
14	1-33181A	MANUALLY OPERATED MICROVALVE VALVOLA КЛАПАН	VALVE VÁLVULA	MIKROVENTIL, MANUELL VÁLVULA	1		X		X
15	EAA0472G10A	PNEUMATICALLY OPERATED VALVE WITH FI VALVOLE A COMANDO PNEUMATICO CON RA КЛАПАН ПНЕВМАТИЧЕСКОГО УПРАВЛЕНИЯ (	SOUPAPE COMMANDE PNEU.+ RACCORDS VÁLVULAS CON MANDO NEUMÁTICO CON RA(	VENTIL, PNEUMATISCH BETRIEBEN, MIT BEFE VÁLVULA A COMANDO PNEUMÁTICO COM JUI	1		X		X

A available - disponible - vorhanden - beschikbaar
disponibile - disponible - disponivel - Доступно

B on request - sur demande - auf Antrag - op aanvraag
a richiesta - a petición - no pedido - По запросу

C suggested - suggeré - vorgeschlagene - aanbevolen
consigliato - sugerido - sugerido - Предлагается

Pos	Code	Designation Designazione ОПИСАНИЕ	Désignation Designaciòn	Bezeichnung Designação	N.	Note Nota HOTa	A	B	C
16	EAA0457G33A	5/2 WAY MONOSTABLE ELETTROVALVOLA 5/2 ХОДОВОЙ ЭЛЕКТРОМАГНИТНЫЙ КЛАПАН	SOUPAPE SOLENOIDE 2 VOIES ELECTROVÁLVULA 5/2	5/2-WEGE MAGNETVENTIL ELETROVALVULA 5/2	1		X		X
17	EAC0125G92A	COVER FOR CONTROL PANEL CARTER MANIPOLATORE КОЖУХ МАНИПУЛЯТОРА	CARTER MANIPULATEUR CÁRTER MANIPULADOR	ABDECKUNG FÜR STEUERTAFEL CÁRTER MANIPULADOR	1		X		X
18	EAW0287G05A	CONSOLE HARNESS QUICKLOCK CABLAGGIO MANIPOLATORI QUICKLOCK КАБЕЛЬНАЯ ПРОВОДКА МАНИРУЛЯТОРА	CABLAGE MANIPULATEURS CABLEADO MANIPULADORES	KONSOLENVERKABELUNG CABAGEM MANIPULADORES	1	quickLOK	X		
18	EAW0287G06A	CONSOLE HARNESS QUICKLOCK RADIO CABLAGGIO MANIPOLATORI QUICKLOCK RAI КАБЕЛЬНАЯ ПРОВОДКА МАНИРУЛЯТОРА	CABLAGE MANIPULATEURS CABLEADO MANIPULADORES	KONSOLENVERKABELUNG CABAGEM MANIPULADORES	1	quickLOK - Radio	X		
18	EAW0287G07A	CONSOLE HARNESS NO QUICKLOCK CABLAGGIO MANIPOLATORI NO QUICKLOCK КАБЕЛЬНАЯ ПРОВОДКА МАНИРУЛЯТОРА	CABLAGE MANIPULATEURS CABLEADO MANIPULADORES	KONSOLENVERKABELUNG CABAGEM MANIPULADORES	1	Manual Clamp	X		
18	EAW0287G08A	CONSOLE HARNESS QUICKLOCK - UL/CSA CABLAGGIO MANIPOLAT. QUICKLOCK - UL/CS КАБЕЛЬНАЯ ПРОВОДКА МАНИРУЛЯТОРА	CABLAGE MANIPULATEURS CABLEADO MANIPULADORES	KONSOLENVERKABELUNG CABAGEM MANIPULADORES	1	quickLOK UL/CSA	X		
18	EAW0287G09A	CONSOLE HARNESS - UL/CSA CABLAGGIO MANIPOLATORI - UL/CSA КАБЕЛЬНАЯ ПРОВОДКА МАНИРУЛЯТОРА	CABLAGE MANIPULATEURS CABLEADO MANIPULADORES	KONSOLENVERKABELUNG CABAGEM MANIPULADORES	1	Manual Clamp UL/CSA	X		
19	EAW0286G33A	WHEEL CLAMP CABLE CAVO SERRAGGIO RUOTA КАБЕЛЬ ЗАМКА КОЛЕСА	CABLE SERRAGE ROUE CABLEADO APRIETE RUEDA	RADKLEMMENKABEL CABO APERTO RODA	1	quickLOK™ WIRELESS		X	

A available - disponible - vorhanden - beschikbaar
disponibile - disponible - disponivel - Доступно

B on request - sur demande - auf Antrag - op aanvraag
a richiesta - a petición - no pedido - По запросу

C suggested - suggeré - vorgeschlagene - aanbevolen
consigliato - sugerido - sugerido - Предлагается

EAZ0122G61A.B

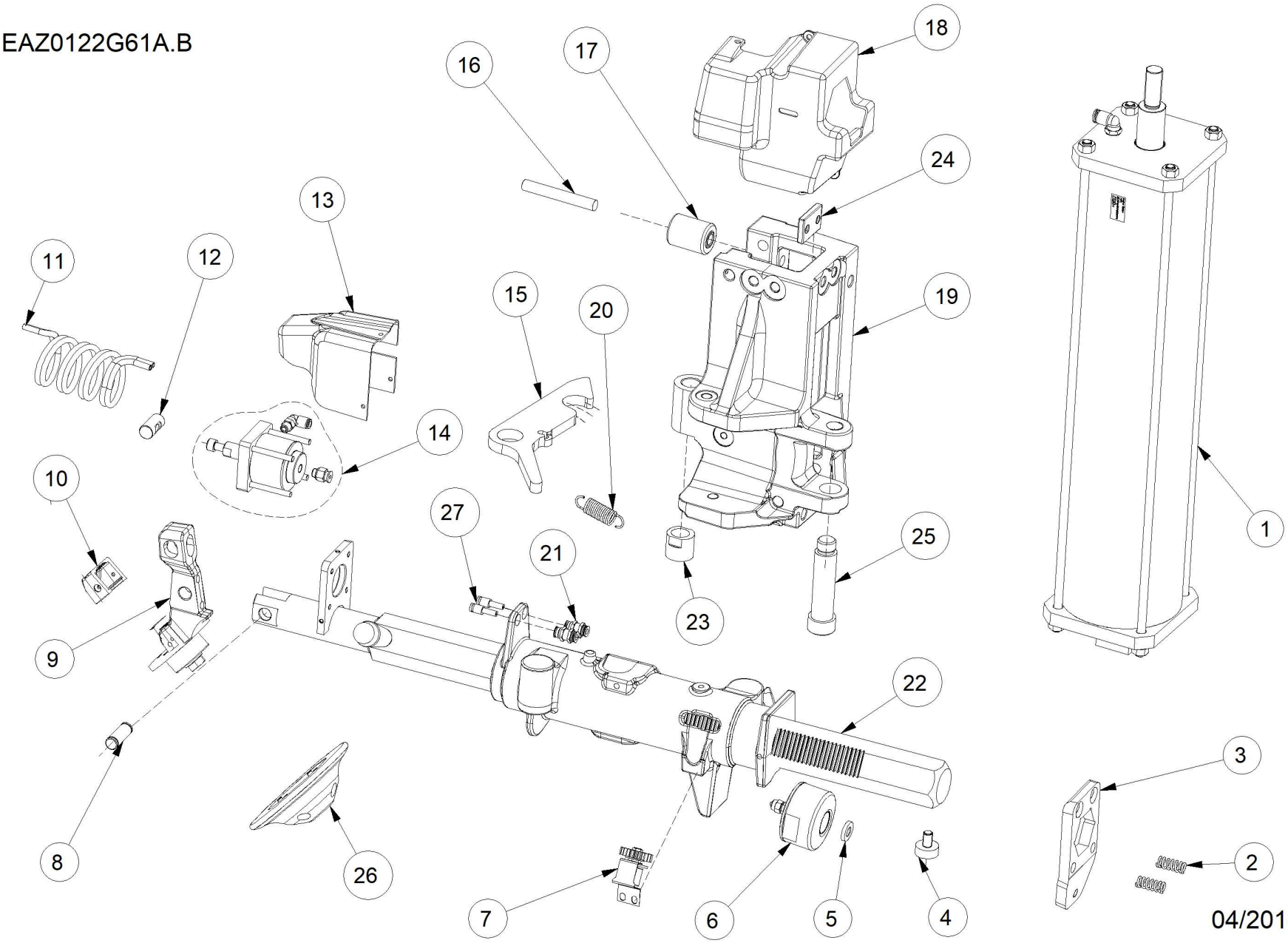

04/2018

Pos	Code	Designation Designazione ОПИСАНИЕ	Désignation Designaciòn	Bezeichnung Designação	N.	Note Nota HOTa	A	B	C
1	EAA0371G76A	BEAD BREAKER CYLINDER CILINDRO STALLONATORE ЦИЛИНДР РАЗБОРТИРОВЩИКА	VERIN DETALONNEUR CILINDRO DESTALONADOR	ABDRÜCKZYLINDER CILINDRO DESMONT. PNEU	1	STROKE 500	X		x
2	EAM0053G62A	SPRING - RECALL, ADJUSTMENT MOLLA RITORNO LEVA STRANGOLO ПРУЖИНА	RESSORT RETOUR LEV. ETRANG. MUELLE REGRESO PALANCA AJUSTE ALIM.	RÜCKHOLFEDER MOLA - RETORNO, AJUSTE	2			X	
3	EAS2109G31A	HORIZONTAL STRANGLE STRANGOLO ORIZZONTALE ФИКСИРУЮЩАЯ ПЛАСТИНА	ETRANGLEUR HORIZONTAL ESTRANGULADOR HORIZONTAL	HORIZONTALE DROSSEL ENFORCADOR HORIZONTAL	1			X	
4	EAC0094G00A	SCREW-ARM,RETAINING VITE ARRESTO BRACCIO ВИНТ РЫЧАГА	VIS ARRET BRAS TORNILLO DE PARO BRAZO	SCHRAUBE PARAFUSO PARADA BRAÇO	1			X	
5	EAM0053G63A	WASHER- REINFORCEMENT RONDELLA DI RINFORZO ZINC. BIANCA ШАЙБА	RONDELLE DE SOUTIEN ARANDELA DE REFUERZO GALV. BLANCA	SCHEIBE REFORÇO - ARRUELA	1			X	
6	EAA0344G48A	CYLINDER - ROD,HORIZONTAL-LOCK CILINDRO BLOCCAGGIO ORIZZONT. ЦИЛИНДР ГОРИЗОНТАЛЬНОЙ БЛОКИРОВКИ	VERIN- BLOCAGE HORIZONTAL CILINDRO BLOQUEAJE ORIZONTAL	ZYLINDER-WAAGER. KLEMMUNG CILINDRO TRAVAGEM HORIZONT.	1		X		x
7	EAA0503G83A	UPPER POTENTIOMETER GROUP GRUPPO POTENZIOMETRO SUPERIORE УЗЕЛ ПОТЕНЦИОМЕТРА ВЕРХНИЙ	GROUPE POTENTIOMETRE SUPERIEUR GRUPO POTENCIÓMETRO SUPERIOR	OBERE POTENTIOMETERBAUGRUPPE GRUPO POTENCIOMETRO SUPERIOR	1			X	
7	EAA0503G84A	UPPER POTENTIOMETER GROUP GRUPPO POTENZIOMETRO SUPERIORE УЗЕЛ ПОТЕНЦИОМЕТРА ВЕРХНИЙ	GROUPE POTENTIOMETRE SUPERIEUR GRUPO POTENCIÓMETRO SUPERIOR	OBERE POTENTIOMETERBAUGRUPPE GRUPO POTENCIOMETRO SUPERIOR	1	UL/CSA		X	
8	EAM0056G68A	JOINT PIN PERNO DI SNODO ПАЛЕЦ	AXE ROTULE PERNO DE ARTICULACIÓN	GELENKSTIFT PINO DE ARTICULAÇÃO	1			X	
9	EAK0341G11A	BEAD BREAKER DISK SUPPORT KIT KIT SUPPORTO DISCO STALLONATORE КОМПЛЕКТ ОПОРЫ ДИСКА ОТБОРТОВЫВАТЕ	KIT SUPPORT DISQUE DETALONNEUR KIT SOPORTE DISCO DESTALONADOR	HALTERUNGSSATZ ABDRÜCKSCHEIBE KIT DE SUPORTE DISCO DESMONTADOR DE F	1		X		x
10	EAC0099G79A	DISK PROTECTION PROTEZIONE DISCO ЗАЩИТА ДИСКА	PROTECTION DISQUE PROTECCIÓN DISCO	SCHUTZ SCHEIBE PROTEÇÃO DISCO	1		X		x
11	EAM0154G86A	MULTIHOSE SPIRAL BLUE D4x2.5 N.5 TURN SPIRALE MULTITUBO D4x2.5 N.5 SPIRE СПИРАЛЬ	SPIRALE MULTITUBE ESPIRAL MULTITUBO	SPIRALE MEHRFACHSCHLAUCH ESPIRAL MULTITUBO	1	D4x2.5 N.5		X	
12	EAM0068G69A	CYLINDER JOINT SNODO CILINDRO ВТУЛКА ЦИЛИНДРА	ROTULE VERIN ARTICULACIÓN CILINDRO	GELENK ZYLINDER ARTICULAÇÃO CILINDRO	1			X	
13	EAC0096G06A	CYILNDER PROTECTION PROTEZIONE CILINDRO КОЖУХ ЦИЛИНДРА	PROTECTEUR VERIN PROTECCIÓN CILINDRO	ZYLINDERSCHUTZ PROTEÇÃO CILINDRO	1		X		x
14	EAK0341G13A	BEAD BREAKER CYLINDER KIT D,50 KIT CILINDRO STALLONATORE КОМПЛЕКТ ЦИЛИНДР РАЗБОРТИРОВЩИКА	KIT VERIN DETALONNEUR D.50 KIT CILINDRO DESTALONADOR	ABDRÜCKZYLINDERKIT KIT CILINDRO EXTRATOR DE TALAO	1			X	
15	EAM0080G58A	HOOK GANCIO КРЮК	CROCHET GANCHO	HAKEN GANCHO	1			X	
16	1-24052A	PIN SPINA ПАЛЕЦ	GOUPILLE PASADOR	STIFT TOMADA	4	12X90 UNI EN 28734		X	

A available - disponible - vorhanden - beschikbaar
disponibile - disponible - disponivel - Доступно

B on request - sur demande - auf Antrag - op aanvraag
a richiesta - a petición - no pedido - По запросу

C suggested - suggeré - vorgeschlagene - aanbevolen
consigliato - sugerido - sugerido - Предлагается

Pos	Code	Designation Designazione ОПИСАНИЕ	Désignation Designaciòn	Bezeichnung Designação	N.	Note Nota HOTa	A	B	C
17	EAM0062G54A	ROLLER RULLO РОЛИК	ROULEAU RODILLO	ROLLE ROLO	4			X	
18	EAC0100G92A	STRANGLE PROTECTION PROTEZIONE STRANGOLO ЗАЩИТНЫЙ КОЖУХ	PROTECTEUR ETRANGLEUR PROTECCIÓN ESTRANGULADOR	DROSSELSCHUTZ PROTEÇÃO ENFORCADOR	1		X		x
19	EAM0080G55A	UPPER BEAD BREAKER CARRIAGE MACHINE CARRELLO STALLONATORE SUP.LAVORATO ТЕЛЕЖКА ОТБОРТОВЫВАТЕЛЯ ВЕРХНИЙ	CHARIOT OU DETALONNEUR SUP. USINE CARRO DESTALONADOR SUP. TRABAJADO	WAGEN OBERE ABDRÜCKER, VERARBEITET CARRO DESMONTADOR SUP. TRABALHADO	4			X	
20	EAM0085G40A	SPRING MOLLA ПРУЖИНА	RESSORT MUELLE	FEDER MOLA	1			X	
21	1-15179A	STRAIGHT FITTING RAPID CONNECTOR 6x4 M RACCORDO RAPIDO DRITTO TUBO 6x4 M12 ШТУЦЕР ПРЯМОЙ 6X4 M12	RACCORD RAPIDE 6x4 M12 CONEXION RAPIDA 6x4 M12	SCHNELLANSCHLUSS 6x4 M12 JUNÇAO RAPIDA RETA TUBO 6x4 M12	2	4x6 M12		X	
22	EAA0371G68A	HEX BAR ASTA ESAGONALE ШЕСТИГРАННАЯ ШТАНГА	TRINGLE HEXAGONALE VARILLA HEXAGONAL	SECHSKANTSTANGE HASTE HEXAGONAL	1			X	
23	EAM0080G60A	ECCENTRIC SPACER DISTANZIALE ECCENTRICO ЭКСЦЕНТРИКОВАЯ ПРОСТАВКА	ENTRETOISE EXCENTRIQUE DISTANCIADOR EXCÉNTRICO	EXZENTER-ABSTANDSSTÜCK DISTANCIADOR EXCÊNTRICO	1			X	
24	EAM0062G55A	SLIDING BLOCK PATTINO ПОЛЗУН	PATIN PATÍN	GLEITSCHUH PATIM	1			X	
25	EAM0080G59A	PIN PERNO ПАЛЕЦ	BROCHE PERNO	STIFT PINO	1			X	
26	EAC0096G43A	BEAD BREAKER DISK DISCO STALLONATORE ДИСК ОТБОРТИРОВЩИКА	DISQUE DETALONNEUR DISCO DESTALONADOR	ABDRÜCKSCHEIBE DISCO DESMONT. PNEU	1		X		
27	1-18379A	REDUCER Ø6-Ø4 RACCORDO RIDUZIONE Ø6-Ø4 ШТУЦЕР ПРЯМОЙ D.6-D.4	RACCORD REDUCTION D.6-D.4 REDUCCIÓN D.6-D.4	REDUKTION D.6-D.4 REDUÇÃO D.6-D.4	2			X	

A available - disponible - vorhanden - beschikbaar
disponibile - disponible - disponivel - Доступно

B on request - sur demande - auf Antrag - op aanvraag
a richiesta - a petición - no pedido - По запросу

C suggested - suggeré - vorgeschlagene - aanbevolen
consigliato - sugerido - sugerido - Предлагается

EAZ0122G60A.C

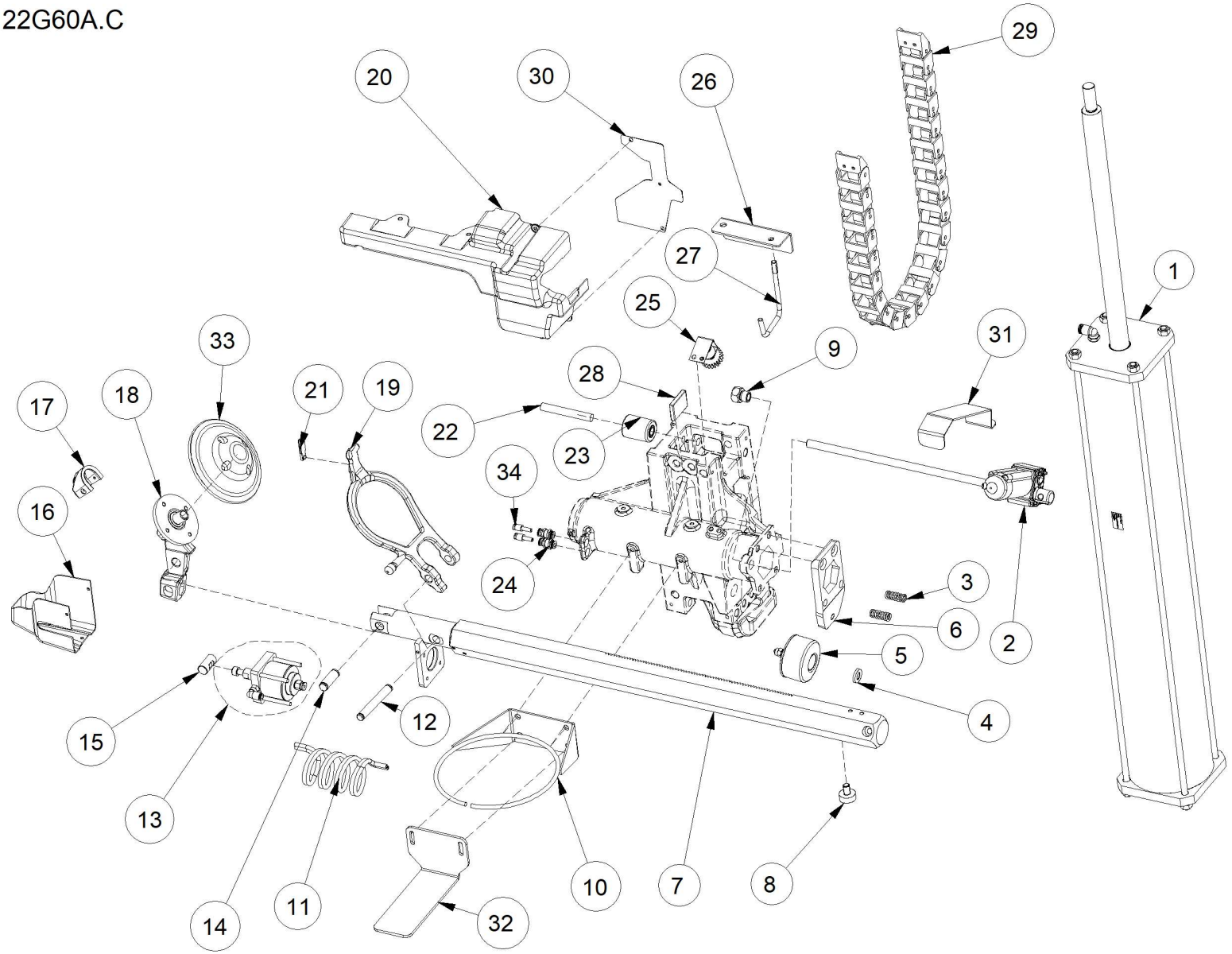

02/2019

Pos	Code	Designation Designazione ОПИСАНИЕ	Désignation Designaciòn	Bezeichnung Designação	N.	Note Nota HOTa	A	B	C
1	EAA0371G75A	BEAD BREAKER CYLINDER CILINDRO STALLONATORE ЦИЛИНДР РАЗБОРТИРОВЩИКА	VERIN DETALONNEUR CILINDRO DESTALONADOR	ABDRÜCKZYLINDER CILINDRO DESMONT. PNEU	1	D125 STROKE 740	X		x
2	EAA0438G99A	ACTUATOR WITH CABLE ATTUATORE CON CAVO ДВИГАТЕЛЬ ПЕРЕМЕЩЕНИЯ С КАБЕЛЕМ	ACTIONNEUR AVEC CABLE ACTUADOR CON CABLE	STELLGLIED MIT KABEL ATUADOR COM CABO	1		X		x
2	EAA0503G17A	ACTUATOR WITH CABLE ATTUATORE CON CAVO ДВИГАТЕЛЬ ПЕРЕМЕЩЕНИЯ С КАБЕЛЕМ	ACTIONNEUR AVEC CABLE ACTUADOR CON CABLE	STELLGLIED MIT KABEL ATUADOR COM CABO	1	UL/CSA	X		x
3	EAM0053G62A	SPRING - RECALL, ADJUSTMENT MOLLA RITORNO LEVA STRANGOLO ПРУЖИНА	RESSORT RETOUR LEV. ETRANG. MUELLE REGRESO PALANCA AJUSTE ALIM.	RÜCKHOLFEDER MOLA - RETORNO, AJUSTE	2			X	
4	EAM0053G63A	WASHER- REINFORCEMENT RONDELLA DI RINFORZO ZINC. BIANCA ШАЙБА	RONDELLE DE SOUTIEN ARANDELA DE REFUERZO GALV. BLANCA	SCHEIBE REFORÇO - ARRUELA	1			X	
5	EAA0344G48A	CYLINDER - ROD,HORIZONTAL-LOCK CILINDRO BLOCCAGGIO ORIZZONT. ЦИЛИНДР ГОРИЗОНТАЛЬНОЙ БЛОКИРОВКИ	VERIN- BLOCAGE HORIZONTAL CILINDRO BLOQUEAJE ORIZONTAL	ZYLINDER-WAAGER. KLEMMUNG CILINDRO TRAVAGEM HORIZONT.	1		X		x
6	EAS2109G31A	HORIZONTAL STRANGLE STRANGOLO ORIZZONTALE ФИКСИРУЮЩАЯ ПЛАСТИНА	ETRANGLEUR HORIZONTAL ESTRANGULADOR HORIZONTAL	HORIZONTALE DROSSEL ENFORCADOR HORIZONTAL	1			X	
7	EAA0472G34A	ASSY HEX BAR LOWER BEAD BREAKER ASTA ESAGONALE STALLONATORE INF. CPL ШЕСТИГНАННАЯ ШТАНГА ОТБОРТОВЫВАТЕ	TRINGLE HEXAGONALE TRINGLE HEXAGONAL VARILLA HEXAGONAL DESTALONADOR INF. C	SECHSECKSTANGE ABDRÜCKER UNTEN HASTE EXAGONAL DESMONTADOR D EPNEUS	1			X	
8	EAC0094G00A	SCREW-ARM,RETAINING VITE ARRESTO BRACCIO ВИНТ РЫЧАГА	VIS ARRET BRAS TORNILLO DE PARO BRAZO	SCHRAUBE PARAFUSO PARADA BRAÇO	1			X	
9	EAM0076G10A	LEAD SCREW NUT CHICCIOLA ГАЙКА	VIS-ECROU TORNILLO PATRÓN	MUTTERSCHLOSS CARACOL	1	TPN12X3 4P		X	
10	EAA0349G76A	RING- BOX, GREASE ANELLO PORTAGRASSO ZINCATO BIANCO КОЛЬЦО ЕМКОСТИ СО СМАЗКОЙ	COURONNE BOITE GRAISSE ANILLO PORTAGRASA GALVANIZADO	RING F. MONTAGEPASTEBEHÄLTER ANEL PORTA-LUBRIFICANTE ZINC. BRANCO	1			X	
11	EAM0154G86A	MULTIHOSE SPIRAL BLUE D4x2.5 N.5 TURN SPIRALE MULTITUBO D4x2.5 N.5 SPIRE СПИРАЛЬ	SPIRALE MULTITUBE ESPIRAL MULTITUBO	SPIRALE MEHRFACHSCHLAUCH ESPIRAL MULTITUBO	1	D4x2.5 N.5		X	
12	EAM0117G58A	PIN PERNO ШТИФТ	PIVOT PERNO	ZAPFEN PINO	1			X	
13	EAK0341G13A	BEAD BREAKER CYLINDER KIT D,50 KIT CILINDRO STALLONATORE КОМПЛЕКТ ЦИЛИНДР РАЗБОРТИРОВЩИКА	KIT VERIN DETALONNEUR D.50 KIT CILINDRO DESTALONADOR	ABDRÜCKZYLINDERKIT KIT CILINDRO EXTRATOR DE TALAO	1			X	
14	EAM0056G68A	JOINT PIN PERNO DI SNODO ПАЛЕЦ	AXE ROTULE PERNO DE ARTICULACIÓN	GELENKSTIFT PINO DE ARTICULAÇÃO	1			X	
15	EAM0068G69A	CYLINDER JOINT SNODO CILINDRO ВТУЛКА ЦИЛИНДРА	ROTULE VERIN ARTICULACIÓN CILINDRO	GELENK ZYLINDER ARTICULAÇÃO CILINDRO	1			X	
16	EAC0127G02A	CYILNDER PROTECTION PROTEZIONE CILINDRO КОЖУХ ЦИЛИНДРА	PROTECTEUR VERIN PROTECCIÓN CILINDRO	ZYLINDERSCHUTZ PROTEÇÃO CILINDRO	1			X	

A available - disponible - vorhanden - beschikbaar
disponibile - disponible - disponivel - Доступно

B on request - sur demande - auf Antrag - op aanvraag
a richiesta - a petición - no pedido - По запросу

C suggested - suggeré - vorgeschlagene - aanbevolen
consigliato - sugerido - sugerido - Предлагается

Pos	Code	Designation Designazione ОПИСАНИЕ	Désignation Designaciòn	Bezeichnung Designação	N.	Note Nota HOTa	A	B	C
17	EAC0099G79A	DISK PROTECTION PROTEZIONE DISCO ЗАЩИТА ДИСКА	PROTECTION DISQUE PROTECCIÓN DISCO	SCHUTZ SCHEIBE PROTEÇÃO DISCO	1		X		x
18	EAK0341G11A	BEAD BREAKER DISK SUPPORT KIT KIT SUPPORTO DISCO STALLONATORE КОМПЛЕКТ ОПОРЫ ДИСКА ОТБОРТОВЫВАТЕ	KIT SUPPORT DISQUE DETALONNEUR KIT SOPORTE DISCO DESTALONADOR	HALTERUNGSSATZ ABDRÜCKSCHEIBE KIT DE SUPORTE DISCO DESMONTADOR DE F	1		X		x
19	EAA0472G27A	TOOL 2 ASSEMBLED GRUPPO UTENSILE 2 УЗЕЛ ИНСТРУМЕНТА 2	GROUPE OUTIL 2 GRUPO HERRAMIENTA 2	BAUGRUPPE WERKZEUG 2 GRUPO FERRAMENTA 2	1		X		X
20	EAC0100G93A	STRANGLE PROTECTION PROTEZIONE STRANGOLO ЗАЩИТНЫЙ КОЖУХ	PROTECTEUR ETRANGLEUR PROTECCIÓN ESTRANGULADOR	DROSSELSCHUTZ PROTEÇAO ENFORCADOR	1		X		X
21	EAK0330G58A	LOWER BEAD TOOL PROTECTOR KIT KIT PROTEZIONE UTENSILE INFERIORE КОМПЛЕКТ НИЖНЕЙ ЗАЩИТЫ ИНСТРУМЕНТА	KIT PROTECTION OUTIL INFERIEUR KIT PROTECCIÓN HERRAMIENTA INFERIOR	SCHUTZSATZ UNTERES WERKZEUG KIT PROTEÇÃO FERRAMENTA INFERIOR	1			X	
22	1-24052A	PIN SPINA ПАЛЕЦ	GOUPILLE PASADOR	STIFT TOMADA	4	12X90 UNI EN 28734		X	
23	EAM0062G54A	ROLLER RULLO РОЛИК	ROULEAU RODILLO	ROLLE ROLO	4			X	
24	1-15179A	STRAIGHT FITTING RAPID CONNECTOR 6x4 M RACCORDO RAPIDO DRITTO TUBO 6x4 M12 ШТУЦЕР ПРЯМОЙ 6X4 M12	RACCORD RAPIDE 6x4 M12 CONEXION RAPIDA 6x4 M12	SCHNELLANSCHLUSS 6x4 M12 JUNÇAO RAPIDA RETA TUBO 6x4 M12	2	4x6 M12		X	
25	EAA0503G81A	POTENTIOMETER GROUP GRUPPO POTENZIOMETRO УЗЕЛ ПОТЕНЦИОМЕТРА	GROUPE POTENTIOMETRE GRUPO POTENCIÓMETRO	POTENTIOMETERBAUGRUPPE GRUPO POTENCIOMETRO	1			X	
25	EAA0503G82A	POTENTIOMETER GROUP GRUPPO POTENZIOMETRO УЗЕЛ ПОТЕНЦИОМЕТРА	GROUPE POTENTIOMETRE GRUPO POTENCIÓMETRO	POTENTIOMETERBAUGRUPPE GRUPO POTENCIOMETRO	1	UL/CSA		X	
26	EAS2131G64A	CARRIER SUPPORT SUPPORTO CATENA PORTACAVI ДЕРЖАТЕЛЬ КАРЕТКИ	SUPPORT CHAINE PORTE-CABLES SOPORTE CADENA PORTACABLES	TRÄGER KABELHALTERKETTE SUPORTE CORRENTE PORTACABOS	1			X	
27	EAM0074G29A	HOOK GANCIO КРЮК	CROCHET GANCHO	HAKEN GANCHO	1			X	
28	EAM0062G55A	SLIDING BLOCK PATTINO ПОЛЗУН	PATIN PATÍN	GLEITSCHUH PATIM	4			X	
29	8-06131A	CARRIER CATENA PORTACAVI КАРЕТКА	CHAINE PORTE-CABLES CADENA PORTACABLES	KABELHALTERKETTE CORRENTE PORTA-CABOS	1			X	
30	EAS2131G15A	STRANGLE COVER COPERTURA STRANGOLO КОЖУХ	HABILLAGE ETRANGLEUR COBERTURA ESTRANGULADOR	DROSSELABDECKUNG COBERTURA ENFORCADOR	1			X	
31	EAA0523G27A	ACTUATOR PROTECTIVE ASM GRUPPO PROTEZIONE ATTUATORE КОЖУХ	TOTE PROTECTION ACTIONNEUR CHAPA DE PROTECCION ACTUADOR	SCHUTZBLECH STELLGLIED CHAPA PROTEÇAO ATUADOR	1			X	
32	EAS2219G19A	PASTE BUCKET SUPPORT LAMIERA SUPPORTO GRASSO МЕТ.ЛИСТ ОПОРЫ СМАЗКОЙ	TOLE SUPPORT GRAISSE PLANCHA SOPORTE GRASA	BLECH HALTERUNG FETT CHAPAS SUPORTE GRAXA	1			X	

A available - disponible - vorhanden - beschikbaar
disponibile - disponible - disponivel - Доступно

B on request - sur demande - auf Antrag - op aanvraag
a richiesta - a petición - no pedido - По запросу

C suggested - suggeré - vorgeschlagene - aanbevolen
consigliato - sugerido - sugerido - Предлагается

Pos	Code	Designation Designazione ОПИСАНИЕ	Désignation Designaciòn	Bezeichnung Designação	N.	Note Nota HOTa	A	B	C
33	EAC0096G43A	BEAD BREAKER DISK DISCO STALLONATORE ДИСК ОТБОРТИРОВЩИКА	DISQUE DETALONNEUR DISCO DESTALONADOR	ABDRÜCKSCHEIBE DISCO DESMONT. PNEU	1		X		
34	1-18379A	REDUCER Ø6-Ø4 RACCORDO RIDUZIONE Ø6-Ø4 ШТУЦЕР ПРЯМОЙ D.6-D.4	RACCORD REDUCTION D.6-D.4 REDUCCIÓN D.6-D.4	REDUKTION D.6-D.4 REDUÇÃO D.6-D.4	2			X	

A available - disponible - vorhanden - beschikbaar
disponibile - disponible - disponivel - Доступно

B on request - sur demande - auf Antrag - op aanvraag
a richiesta - a petición - no pedido - По запросу

C suggested - suggeré - vorgeschlagene - aanbevolen
consigliato - sugerido - sugerido - Предлагается

EAZ0122G55A.B

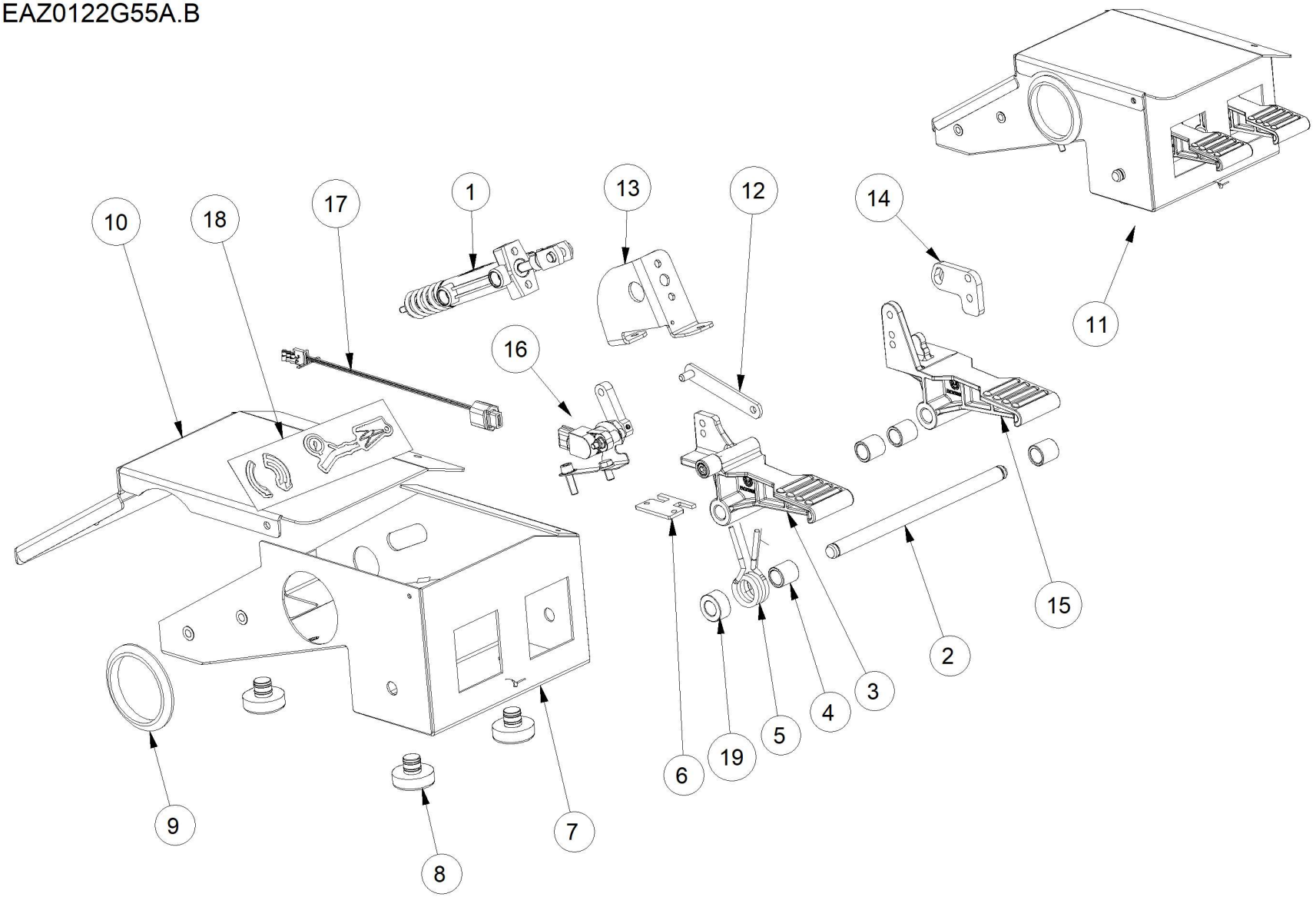

01/2019

Pos	Code	Designation Designazione ОПИСАНИЕ	Désignation Designaciòn	Bezeichnung Designação	N.	Note Nota HOTa	A	B	C
1	EAK0330G65A	VALVE, BEAD INFLATING KIT KIT VALVOLA GONFIAGGIO GT КОМПЛЕКТ КЛАПАНА НАКАЧИВАНИЯ GT	KIT VALVE GONFLAGE GT KIT VÁLVULA INFLADO GT	VENTILSATZ GT-FÜLLUNG KIT VÁLVULA ENSUFLAMENTO GT	1		X		x
2	EAM0116G75A	SHFT-HINGE PEDAL PERNO FULCRO PEDALI ШТИФТ ОПОРЫ ПЕДАЛЕЙ	PIVOT D'APPUI PEDALE PERNO PIVOTE PEDALES	DREHZAPFEN PEDALE PINO FULCRO PEDAIS	1			X	
3	EAA0471G28A	RIGHT SWITCH FOOT PEDAL PEDALE SWITCH DESTRO ПЕДАЛЬ СПРАВА	INTERRUPTEUR PEDALE DROITE PEDAL INTERRUPTOR DERECHO	RECHTER PEDALSCHALTER PEDAL SWITCH DIREITO	1			X	
4	EAM0048G79A	BUSHING, CENTERING- SPRING BOCCOLA CENTRAGGIO MOLLA ЦЕНТРОВОЧНАЯ ВТУЛКА ПРУЖИНЫ	COQUILLE SIEGE RESSORT CASQUILLO CENTRADO MUELLE	BUCHSE ARRUELA CENTRALIZAÇÃO MOLA	4			X	
5	EAM0075G56A	SPRING, PEDAL SWITCH 2SPEED MOLLA PEDALE INTERRUTTORE 2SP ПРУЖИНА ПЕДАЛИ ВЫКЛЮЧАТЕЛЯ 2СКОР.	RESSORT INTERRUPTEUR PÉDALE 2SP MUELLE PEDAL INTERRUPTOR 2SP	FEDER PEDALSCHALTER 2SPEED MOLA, INTERRUPTOR PEDAL 2VEL	1		X		X
6	EAS2175G82A	COMMUTATOR SPRING GUIDE GUIDA MOLLA INVERTITORE НАПРАВЛЯЮЩАЯ ПРУЖИНЫ ИНВЕРТОРА	GUIDE RESSORT COMMUTATEUR GUÍA MUELLE INVERSOR	FÜHRUNG UMWANDLERFEDER GUIA MOLA INVERSOR	1			X	
7	EAA0470G09A	PEDAL UNIT BOX CORPO PEDALIERA КОРПУС ПЕДАЛЬНОГО МЕХАНИЗМА	CORPS PEDALIER CUERPO GRUPO PEDALES	KASTEN PEDALEINHEIT CORPO DE PEDAIS	1			X	
8	EAC0078G03A	CIRCULAR RUBBER FOOT PIEDE CIRCOLARE РЕЗИНОВАЯ ОПОРА КРУГЛАЯ	SABOT CIRCULAIRE PIE CIRCULAR	RUNDER FUSS PE CIRCULAR	3			X	
9	1-11376A	D64.5 SNAP-IN PLUG FOR PLATE TAPPO D64.5 X FORI SU LAMIERA D64,5 ВСТАВКА	BOUCHON D64.5 X PERÇAGES SUR TOLE TAPÓN D64.5 PARA ORIFICIOS SOBRE CHAPA	VERSCHLUSS D64.5 F. BOHRUNGEN AM BLEC TAMPA D64.5 P/ FUROS NA CHAPA	1			X	
10	EAS2187G72A	TOP COVER PEDAL UNIT COPERTURA PEDALE КРЫШКА ПЕДАЛИ	COUVERTURE PEDALE CÁRTER PEDAL	ABDECKUNG PEDALEINHEIT COBERTURA PEDAL	1			X	
11	EAA0470G08A	PEDAL UNIT PEDALE ПЕДАЛЬ	PEDALE PEDAL	PEDALEINHEIT PEDAL	1			X	
12	EAS2132G66A	ROD PEDAL POTENTIOMETER BIELLA POTENZIOMETRO ТЯГА ПОТЕНЦИОМЕТР	BIELLE POTENTIOMETRE BIELA POTENCIÓMETRO	POTENTIOMENTERSTANGE BIELA POTENCIOMETRO	1			X	
13	EAS2175G83A	GT VALVE BRACKET STAFFA VALVOLA GONFIAGGIO КРОНШТЕЙН КЛАПАНА НАКАЧИВАНИЯ	ETRIER VALVE GONFLAGE SOPORTE VÁLVULA INFLADO	BÜGEL GT-VENTIL PRENDEDOR VÁLVULA ENSUFLAMENTO	1			X	
14	EAM0141G87A	FORK EXTENSION PROLUNGA PER FORCELLA УДЛИНИТЕЛЬ ДЛЯ ВИЛКИ	RALLONGE POUR FOURCHE PROLONGADOR PARA HORQUILLA	GABELVERLÄNGERUNG EXTENSÃO PARA GARFO	1			X	
15	EAM0147G15A	STANDARD PEDAL - MACHINED PEDALE STD - LAVORATO СТАНД. ПЕДАЛЬ - ОБРАБОТАНА	PEDALE STANDARD - USINEE PEDAL STD - TRABAJADO	STANDARD-PEDAL - BEARBEITET PEDAL STD - TABALHADO	1			X	
16	EAK0330G64A	PEDAL CABLE WITH POTENTIOMETER CAVO PEDALIERA CON POTENZIOMETRO ПОТЕНЦИОМЕТР С КАБЕЛЕМ	CABLE PEDALIER AVEC POTENTIOMETRE CABLE PEDALERA CON POTENCIÓMETRO	KABEL PEDALEINHEIT MIT POTENTIOMETER CABO PEDALEIRA COM POTENCIÔMETRO	1		X		x
17	EAW0286G08A	CABLE FOR CTS POTENTIOMETER CAVO PER POTENZIOMETRO CTS CTS ПОТЕНЦИОМЕТР КАБЕЛЕМ	CABLE POUR POTENTIOMETRE CTS CABLE POTENCIÓMETRO CTS	KABEL FÜR POTENTIOMETER CTS CABO POTENCIOMETRO CTS	1	NO CE	X		x

A available - disponible - vorhanden - beschikbaar
disponibile - disponible - disponivel - Доступно

B on request - sur demande - auf Antrag - op aanvraag
a richiesta - a petición - no pedido - По запросу

C suggested - suggeré - vorgeschlagene - aanbevolen
consigliato - sugerido - sugerido - Предлагается

Pos	Code	Designation Designazione ОПИСАНИЕ	Désignation Designaciòn	Bezeichnung Designação	N.	Note Nota HOTa	A	B	C
18	EAL0462G09A	PEDAL LABEL TARGA PEDALIERA ЗАВОДСКАЯ ТАБЛИЧКА ПЕДАЛЬНОГО УСТРО	PLAQUE PEDALIER PLACA GRUPO PEDALES	PEDALKABEL PLACA DE PEDAIS	1			X	
19	EAM0167G76A	SPACER DISTANZIALE ПРОСТАВКА	ENTRETOISE DISTANCIADOR	ABSTANDSSTÜCK DISTANCIADOR	1			X	

A available - disponible - vorhanden - beschikbaar
disponibile - disponible - disponivel - Доступно

B on request - sur demande - auf Antrag - op aanvraag
a richiesta - a petición - no pedido - По запросу

C suggested - suggeré - vorgeschlagene - aanbevolen
consigliato - sugerido - sugerido - Предлагается

EAZ0122G70A.B

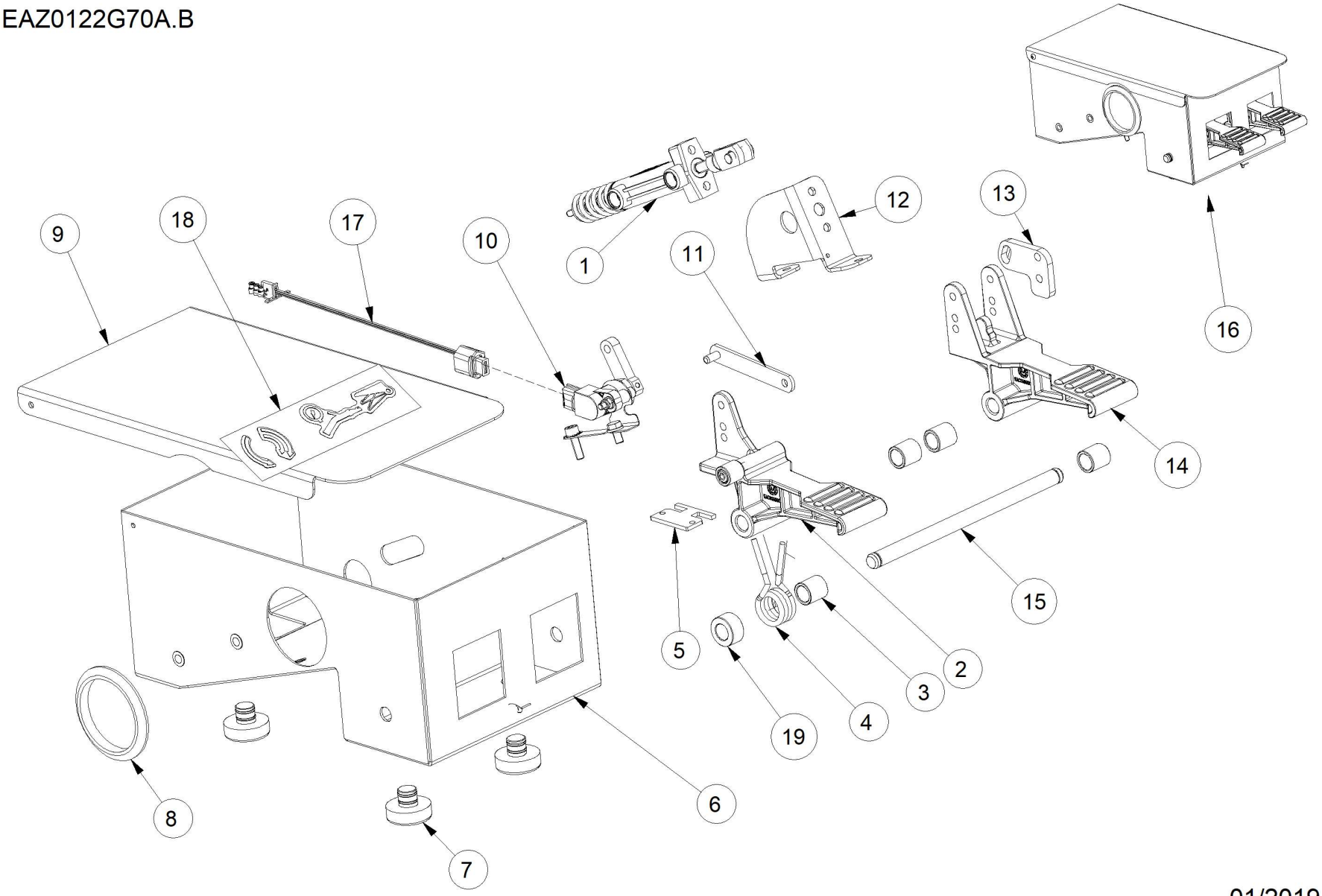

01/2019

Pos	Code	Designation Designazione ОПИСАНИЕ	Désignation Designaciòn	Bezeichnung Designação	N.	Note Nota HOTa	A	B	C
1	EAK0330G65A	VALVE, BEAD INFLATING KIT KIT VALVOLA GONFIAGGIO GT КОМПЛЕКТ КЛАПАНА НАКАЧИВАНИЯ GT	KIT VALVE GONFLAGE GT KIT VÁLVULA INFLADO GT	VENTILSATZ GT-FÜLLUNG KIT VÁLVULA ENSUFLAMENTO GT	1		X		x
2	EAA0356G92A	RIGHT SWITCH FOOT PEDAL PEDALE SWITCH DX ПЕДАЛЬ ПРАВАЯ	PEDALE INTERRUPTEUR DROIT PEDAL INTERRUPTOR DER.	PEDAL SCHALTER RECHTS PEDAL INTERRP. DIR.	1			X	
3	EAM0048G79A	BUSHING, CENTERING- SPRING BOCCOLA CENTRAGGIO MOLLA ЦЕНТРОВОЧНАЯ ВТУЛКА ПРУЖИНЫ	COQUILLE SIEGE RESSORT CASQUILLO CENTRADO MUELLE	BUCHSE ARRUELA CENTRALIZAÇÃO MOLA	4			X	
4	EAM0075G56A	SPRING, PEDAL SWITCH 2SPEED MOLLA PEDALE INTERRUTTORE 2SP ПРУЖИНА ПЕДАЛИ ВЫКЛЮЧАТЕЛЯ 2СКОР.	RESSORT INTERRUPTEUR PÉDALE 2SP MUELLE PEDAL INTERRUPTOR 2SP	FEDER PEDALSCHALTER 2SPEED MOLA, INTERRUPTOR PEDAL 2VEL	1		X		X
5	EAS2175G82A	COMMUTATOR SPRING GUIDE GUIDA MOLLA INVERTITORE НАПРАВЛЯЮЩАЯ ПРУЖИНЫ ИНВЕРТОРА	GUIDE RESSORT COMMUTATEUR GUÍA MUELLE INVERSOR	FÜHRUNG UMWANDLERFEDER GUIA MOLA INVERSOR	1			X	
6	EAA0481G01A	ASSY BASE FOR PEDAL UNIT GRUPPO BASAMENTO PER PEDALIERA LATE УЗЕЛ ОСНОВАНИЯ ДЛЯ БОКОВОГО ПЕДАЛЬН	GROUPE SOCLE POUR PEDALIER LATERAL GRUPO BANCADA PARA GRUPO PEDALES LA	BODENBAUGRUPPE FÜR PEDALEINHEIT SEITI GRUPO BASE PARA PEDAIS LATERAL	1			X	
7	EAC0078G03A	CIRCULAR RUBBER FOOT PIEDE CIRCOLARE РЕЗИНОВАЯ ОПОРА КРУГЛАЯ	SABOT CIRCULAIRE PIE CIRCULAR	RUNDER FUSS PE CIRCULAR	3			X	
8	1-11376A	D64.5 SNAP-IN PLUG FOR PLATE TAPPO D64.5 X FORI SU LAMIERA D64,5 ВСТАВКА	BOUCHON D64.5 X PERÇAGES SUR TOLE TAPÓN D64.5 PARA ORIFICIOS SOBRE CHAPA	VERSCHLUSS D64.5 F. BOHRUNGEN AM BLEC TAMPA D64.5 P/ FUROS NA CHAPA	1			X	
9	EAS2201G20A	TOP COVER PEDAL UNIT COPERTURA PEDALE КРЫШКА ПЕДАЛЬНОГО УСТРОЙСТВА	COUVERTURE PEDALE REVESTIMIENTO PEDAL	PEDALABDECKUNG COBERTURA PEDAL	1			X	
10	EAK0330G64A	PEDAL CABLE WITH POTENTIOMETER CAVO PEDALIERA CON POTENZIOMETRO ПОТЕНЦИОМЕТР С КАБЕЛЕМ	CABLE PEDALIER AVEC POTENTIOMETRE CABLE PEDALERA CON POTENCIÓMETRO	KABEL PEDALEINHEIT MIT POTENTIOMETER CABO PEDALEIRA COM POTENCIÔMETRO	1		X		x
11	EAS2132G66A	ROD PEDAL POTENTIOMETER BIELLA POTENZIOMETRO ТЯГА ПОТЕНЦИОМЕТР	BIELLE POTENTIOMETRE BIELA POTENCIÓMETRO	POTENTIOMENTERSTANGE BIELA POTENCIOMETRO	1			X	
12	EAS2175G83A	GT VALVE BRACKET STAFFA VALVOLA GONFIAGGIO КРОНШТЕЙН КЛАПАНА НАКАЧИВАНИЯ	ETRIER VALVE GONFLAGE SOPORTE VÁLVULA INFLADO	BÜGEL GT-VENTIL PRENDEDOR VÁLVULA ENSUFLAMENTO	1			X	
13	EAM0141G87A	FORK EXTENSION PROLUNGA PER FORCELLA УДЛИНИТЕЛЬ ДЛЯ ВИЛКИ	RALLONGE POUR FOURCHE PROLONGADOR PARA HORQUILLA	GABELVERLÄNGERUNG EXTENSÃO PARA GARFO	1			X	
14	EAM0068G95A	STANDARD PEDAL - MACHINED PEDALE STD - LAVORATO ПЕДАЛЬ СТАНДАРТНАЯ, МЕХ. ОБРАБОТКА	PEDAL STD. PEDAL STD	PEDAL STD. PEDAL PDR – TRABALHADO	1			X	
15	EAM0116G75A	SHFT-HINGE PEDAL PERNO FULCRO PEDALI ШТИФТ ОПОРЫ ПЕДАЛЕЙ	PIVOT D'APPUI PEDALE PERNO PIVOTE PEDALES	DREHZAPFEN PEDALE PINO FULCRO PEDAIS	1			X	
16	EAA0481G00A	PEDAL UNIT PEDALE ПЕДАЛЬ	PEDALE INTERRUPTEUR DROIT PEDAL	PEDALEINHEIT PEDAL	1	8800		X	
17	EAW0286G08A	CABLE FOR CTS POTENTIOMETER CAVO PER POTENZIOMETRO CTS CTS ПОТЕНЦИОМЕТР КАБЕЛЕМ	CABLE POUR POTENTIOMETRE CTS CABLE POTENCIÓMETRO CTS	KABEL FÜR POTENTIOMETER CTS CABO POTENCIOMETRO CTS	1	NO CE	X		x

A available - disponible - vorhanden - beschikbaar
disponibile - disponible - disponivel - Доступно

B on request - sur demande - auf Antrag - op aanvraag
a richiesta - a petición - no pedido - По запросу

C suggested - suggeré - vorgeschlagene - aanbevolen
consigliato - sugerido - sugerido - Предлагается

Pos	Code	Designation Designazione ОПИСАНИЕ	Désignation Designaciòn	Bezeichnung Designação	N.	Note Nota HOTa	A	B	C
18	EAL0462G09A	PEDAL LABEL TARGA PEDALIERA ЗАВОДСКАЯ ТАБЛИЧКА ПЕДАЛЬНОГО УСТРО	PLAQUE PEDALIER PLACA GRUPO PEDALES	PEDALKABEL PLACA DE PEDAIS	1			X	
19	EAM0167G76A	SPACER DISTANZIALE ПРОСТАВКА	ENTRETOISE DISTANCIADOR	ABSTANDSSTÜCK DISTANCIADOR	1			X	

A available - disponible - vorhanden - beschikbaar
disponibile - disponible - disponivel - Доступно

B on request - sur demande - auf Antrag - op aanvraag
a richiesta - a petición - no pedido - По запросу

C suggested - suggeré - vorgeschlagene - aanbevolen
consigliato - sugerido - sugerido - Предлагается

EAZ0122G76A.A

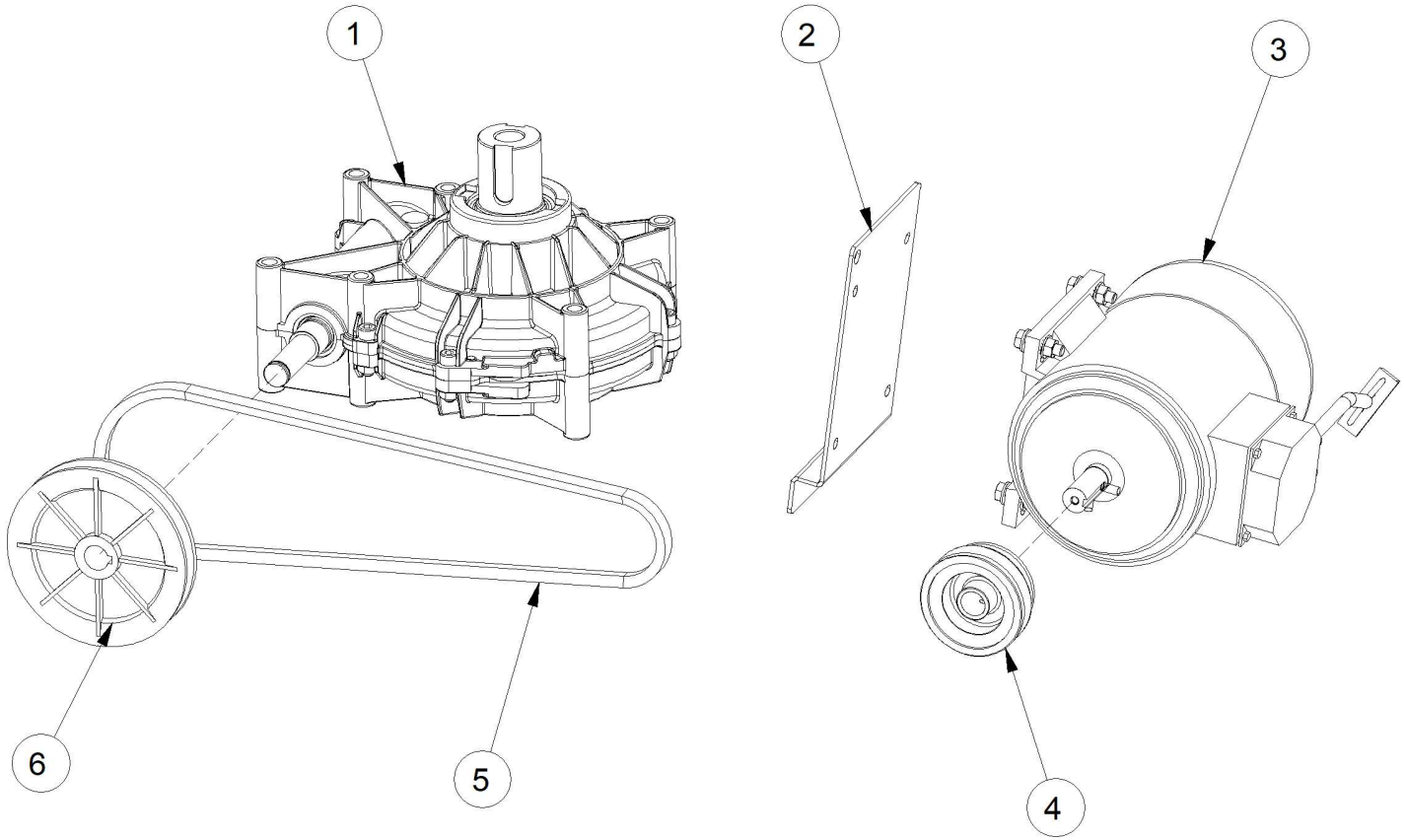

04/2018

Pos	Code	Designation Designazione ОПИСАНИЕ	Désignation Designaciòn	Bezeichnung Designação	N.	Note Nota HOTa	A	B	C
1	EAA0508G10A	GEARBOX FOR SEMI-AUTOM. TC RIDUTTORE PER SMONTAGOMME SEMIAUTC РЕДУКТОР ДЛЯ ПОЛУАВТОМАТИЧЕСКОГО СТ	REDUCTEUR DEMONTE-PNEUS SEMI-AUTOM REDUCTOR DESMONT. RUEDAS SEMIAUTOM.	GETRIEBE F/HALBAUTOM. REIFENMONTIERM/ REDUTOR PARA DESMONTADOR DE PNEUS S	1		X		
2	EAS2130G25A	MOTOR SUPPORT LAMIERA SUPPORTO MOTORE СТАЛЬНОЙ ЛИСТ ОПОРЫ ДВИГАТЕЛЯ	SUPPORT MOTEUR CHAPA SOPORTE MOTOR	MOTORHALTERUNG CHAPAS SUPORTE MOTOR	1			X	
3	EAA0438G95A	HS MOTOR WITH CABLE FOR INVERTER MOTORE HS CON CAVO PER INVERTER ДВИГАТЕЛЬ HS С КАБЕЛЕМ ДЛЯ ИНВЕРТОРА	MOTEUR HS AVEC CABLE POUR ONDULEUR MOTOR HS CON CABLE PARA INVERSOR	HS-MOTOR MIT KABEL FÜR INVERTER MOTOR HS COM CABO PARA INVERTER	1			X	
3	EAA0439G20A	HIGH SPPED MOTOR GROUP GRUPPO MOTORE ALTA VELOCITA СТАЛЬНОЙ ЛИСТ ОПОРЫ ДВИГАТЕЛЯ	GROUPE MOTEUR HAUTE VIT. GRUPO MOTOR ALTA VEL.	MOTORGRUPPE HOCHGESCHW. GRUPO MOTOR ALTA VEL.	1	UL/CSA		X	
4	EAM0043G99A	PULLEY, DOUBLE PULEGGIA DOPPIA ШКИВ ДВОЙНОЙ	POULIE DOUBLE POLEA DOBLE	DOPPEL-KEILRIEMENSCHEIBE POLIA DUPLA	1			X	
5	8-06831A	TRAPEZOIDAL DIRVING BELT A38 1/2 CINGHIA TRAPEZOIDALE РЕМЕНЬ А38 1/2" ТРАПЕЦЕВИДНЫЙ	COURROIE TRAPEZOIDALE CORREA TRAPEZOIDAL A38 1/2	SCHMALKEILRIEMEN A38 1/2 CORREIA TRAPEZOIDAL A38 1/2	1		X		x
6	EAK0341G09A	REDUCTION UNIT PULLEY KIT KIT PULEGGIA RIDUTTORE ШКИВ РЕДУКТОРА	KIT POULIE REDUCTEUR KIT POLEA REDUCTOR	SET GETRIEBE-RIEMENSCHEIBE KIT POLIA REDUTOR	1	Dp 130mm	X		

A available - disponible - vorhanden - beschikbaar
disponibile - disponible - disponivel - Доступно

B on request - sur demande - auf Antrag - op aanvraag
a richiesta - a petición - no pedido - По запросу

C suggested - suggeré - vorgeschlagene - aanbevolen
consigliato - sugerido - sugerido - Предлагается

EAZ0122G58A.B

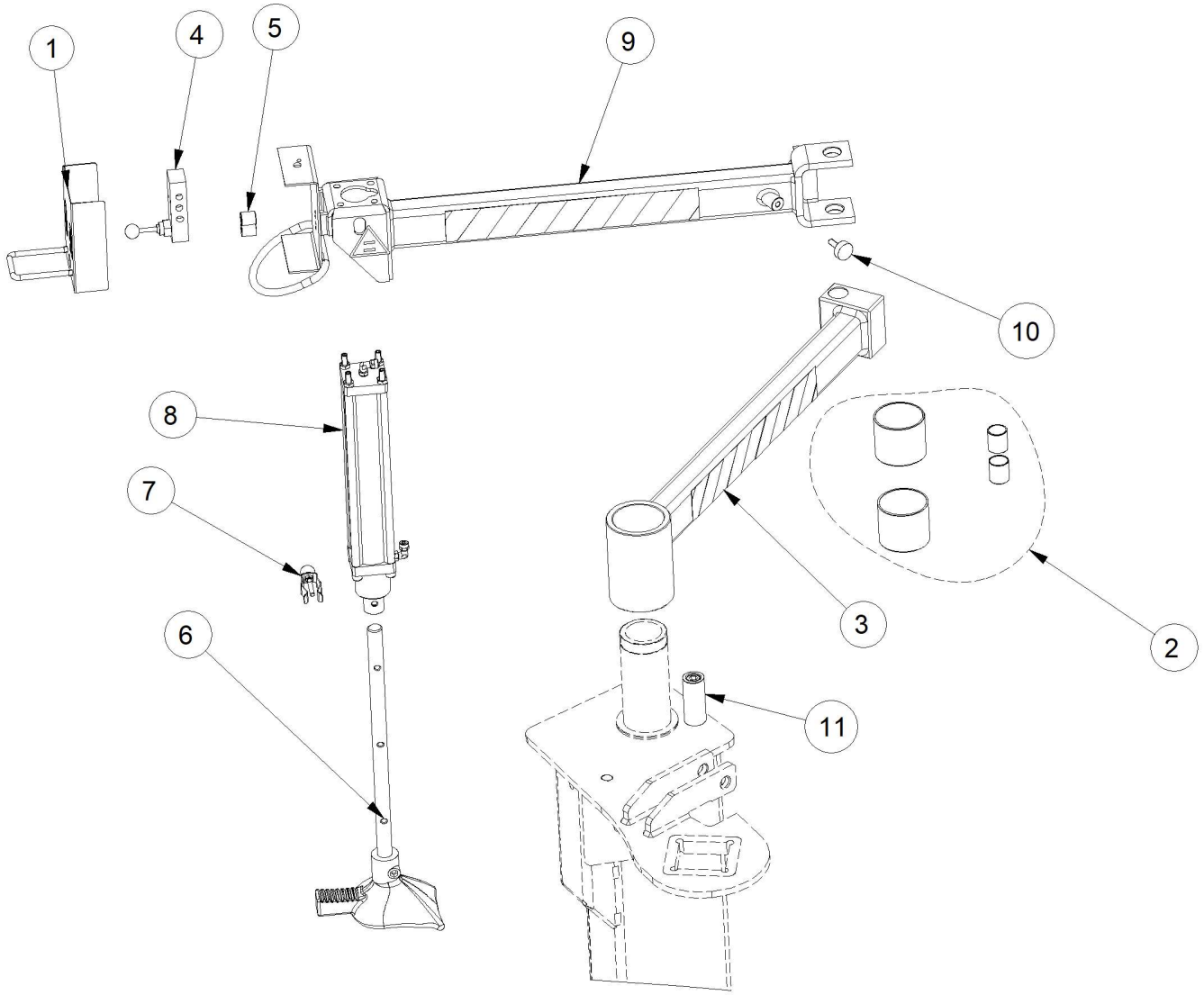

10/2018

Pos	Code	Designation Designazione ОПИСАНИЕ	Désignation Designaciòn	Bezeichnung Designação	N.	Note Nota HOTa	A	B	C
1	EAK0330G80A	VALVE, CONTROLS VALVOLA COMANDI КЛАПАН	SOUPAPE CONTROLE VALVULA MANDO	STEUERVENTIL VÁLVULA COMANDOS	1			X	
2	EAK0330G78A	UPPER ARM BUSHING KIT KIT BOCCOLE BRACCIO SUPERIORE КОМПЛЕКТ ВТУЛКИ ВЕРХНЕГО РЫЧАГА	KIT BAGUES BRAS SUPERIEUR KIT CASQUILLOS BRAZO SUPERIOR	BUCHSENSATZ OBERER ARM KIT ARRUELAS BRAÇO SUPERIOR	1			X	
3	EAA0481G92A	UPPER ARM GROUP GRUPPO BRACCIO SUPERIORE УЗЕЛ ВЕРХНЕГО РЫЧАГА	GROUPE BRAS SUPERIEUR GRUPO BRAZO SUPERIOR	BAUGRUPPE OBERER ARM GRUPO BRAÇO SUPERIOR	1			X	
4	EAA0328G73A	VALVE, CONTROLS VALVOLA COMANDI КЛАПАН	SOUPAPE CONTROLE VALVULA MANDO	STEUERVENTIL VÁLVULA COMANDOS	1		X		X
5	EAK0330G79A	ANTIROTATION BUSHING KIT KIT BOCCOLE ANTIROTAZIONE КОМПЛЕКТ ВТУЛКИ АНТИВРАЩЕНИЯ	KIT BAGUES ANTI-ROTATION KIT CASQUILLOS ANTIRROTACIÓN	BUCHSENSATZ DREHSICHERUNG KIT ARRUELAS ANTIROTAÇÃO	1			X	
6	EAA0503G76A	EXTENSION WITH TOOL PROLUNGA CON LO STRUMENTO УДЛИНИТЕЛЬ С ИНСТРУМЕНТОМ	EXTENSION AVEC OUTIL ALARGO CON HERRAMIENTA	VERLÄNGERUNG MIT MONTAGEKOPF EXTENSÃO COM FERRAMENTA	1			X	
7	EAA0350G67A	EXTENSION CLIP AGGANCIO ESTENSIONE ЗАЖИМ УДЛИНИТЕЛЯ	ACCROCHAGE EXTENSION ENGANCHE EXTENSIÓN	KOPPLUNGSERWEITERUNG GANCHO EXTENSÃO	1			X	
8	EAA0345G61A	CYLINDER CILINDRO CON PROLUNGA ЦИЛИНДР	VERIN AVEC RALLONGE CILINDRO CON ALARGADOR	ZYLINDER MIT VERLÄNGERUNG CILINDRO COM EXTENSÃO	1	D50	X		x
9	EAA0457G46A	ARM, CYLINDER SUPPORT BRACCIO SUPPORTO CILINDRO, NERO BUCC РЫЧАГ ОПОРЫ ЦИЛИНДРА, ЧЕРНЫЙ ВТУЛКА	BRAS SUPPORT CYLINDRE BRAZO SOPORTE CYLINDRO	ZYLINDERHALTERUNGSARM, SCHWARZ BRAÇO SUPORTE CILINDRO, PRETO BUCC.	1			X	
10	8-14418A	BUMPER 25x10 / M8x25 PARAURTI 25x10 / M8x25 БУФЕР 25X10 / M8X25	BUTOIR 25x10 / M8x25 BUMPER 25x10 / M8x25	PUFFER 25x10 / M8x25 BUMPER 25x10 / M8x25	1		X		
11	EAM0161G89A	REAR BUSHING BOCCOLA POSTERIORE ВТУЛКА ЗАДНЯЯ	BAGUE ARRIERE CASQUILLO POSTERIOR	BUCHSE HINTEN ARRUELA POSTERIOR	1			X	

A available - disponible - vorhanden - beschikbaar
disponibile - disponible - disponivel - Доступно

B on request - sur demande - auf Antrag - op aanvraag
a richiesta - a petición - no pedido - По запросу

C suggested - suggeré - vorgeschlagene - aanbevolen
consigliato - sugerido - sugerido - Предлагается

EAZ0122G56A.A

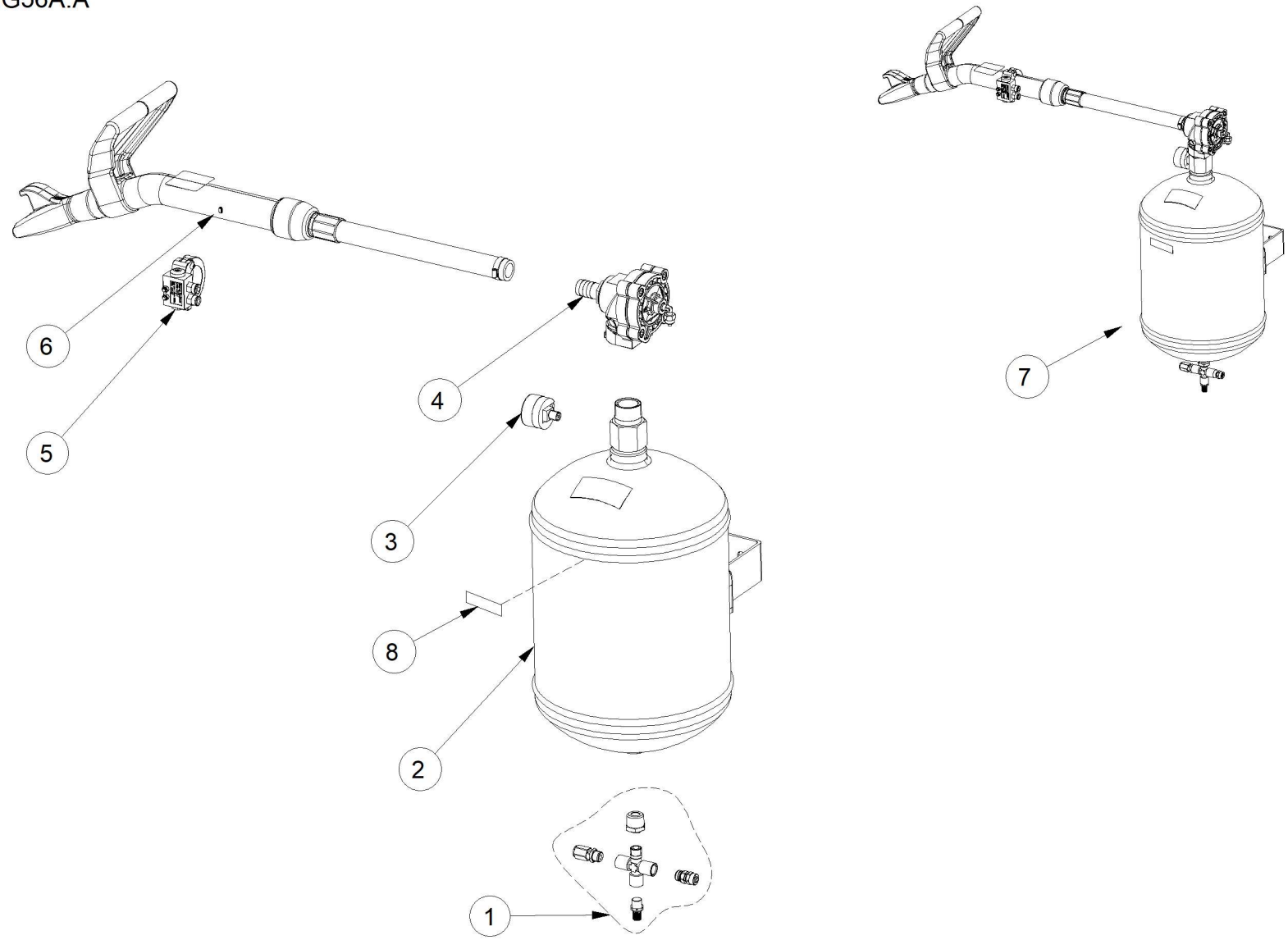

04/2018

Pos	Code	Designation Designazione ОПИСАНИЕ	Désignation Designaciòn	Bezeichnung Designação	N.	Note Nota HOTa	A	B	C
1	EAK0306G46A	FITTINGS FOR GT NOZZLE KIT RACCORDI UGELLO GT ШТУЦЕРЫ ДЛЯ СОПЕЛ GT	KIT RACCORDS BUSE GT KIT CONEXIONES BOQUILLA GT	SET ANSCHLÜSSE GT-DÜSE KIT JUNÇÕES BICO DE SOPRO GT	1			X	
2	EAK0330G85A	TANK GROUP KIT KIT GRUPPO SERBATOIO КОМПЛЕКТ УЗЛА БАКА	KIT GROUPE RESERVOIR KIT GRUPO DEPÓSITO	SATZ TANKBAUGRUPPE KIT GRUPO RESERVATÓRIO	1			X	
3	8-06620A	GAUGE,1/8"REAR CONNECTION,0-25 bar S MANOMETRO ATTACCO POSTE. 1/8" SCAL МАНОМЕТР 1/8"	MANOMETRE , RACCORD ARRIERE 1/8" SCAL MANÓMETRO CONEXIÓN TRAS. 1/8" SCAL	MANOMETER HINTERER ANSCHLUSS 1/8" MANOMETRO CONEXAO COLUNA. 1/8" SCAL	1			X	
4	EAK0330G84A	VALVE AIR-CONTROLLED KIT KIT VALVOLA COMAN.PNEUM. КОМПЛЕКТ КЛАПАНА ПНЕВМ. УПРАВЛЕНИЯ	KIT VALVE COMMANDE PNEUM. KIT VÁLVULA MAN. NEUMÁT.	VENTILSATZ PNEUM. STEUERUNG KIT VÁLVULA COMAN.PNEUM.	1			X	
5	EAA0362G84A	BEAD INFLATOR CONTROL VALVE VALVOLA AZIONAMENTO GT COMPLETA КЛАПАН УПРАВЛЕНИЯ НАКАЧКОЙ	VALVE ACTIONNEMENT DETALONNEUR VÁLVULA ACCIONAMENTO GT COMPLETA	VENTIL, GT-AKTIVIERUNG, KOMPLETT VÁLVULA ACIONAMENTO GT COMPLETA	1		X		
6	EAK0330G83A	NOZZLE TI GROUP KIT KIT GRUPPO UGELLO GT КОМПЛЕКТ УЗЛА СОПЛА GT	KIT GROUPE BUSE GT KIT GRUPO BOQUILLA GT	SATZ GT-DÜSENBAUGRUPPE KIT GRUPO BICO DE SOPRO GT	1			X	
7	EAA0470G66A	ASSY BS 16 lt GRUPPO GT 16 lt УЗЕЛ GT 16 л	GROUPE GT 16 l GRUPO GT 16 L	GT-BAUGRUPPE 16 l GRUPO GT 16 lt	1			X	
8	EAL0408G56A	PLATE, VALVE 5 WAYS TARGA VALVOLA 5 VIE ЗАВОДСКАЯ ТАБЛИЧКА 5-ХОДОВОГО КЛАПАН	PLAQUETTE VANNE 5 VOIES PLAQUETA VALVULA 5 VIAS	VENTILPLATTE, 5-WEGE PLACA VÁLVULA 5 VIAS	1		X		

A available - disponible - vorhanden - beschikbaar
disponibile - disponible - disponivel - Доступно

B on request - sur demande - auf Antrag - op aanvraag
a richiesta - a petición - no pedido - По запросу

C suggested - suggeré - vorgeschlagene - aanbevolen
consigliato - sugerido - sugerido - Предлагается

EAZ0137G22A.B

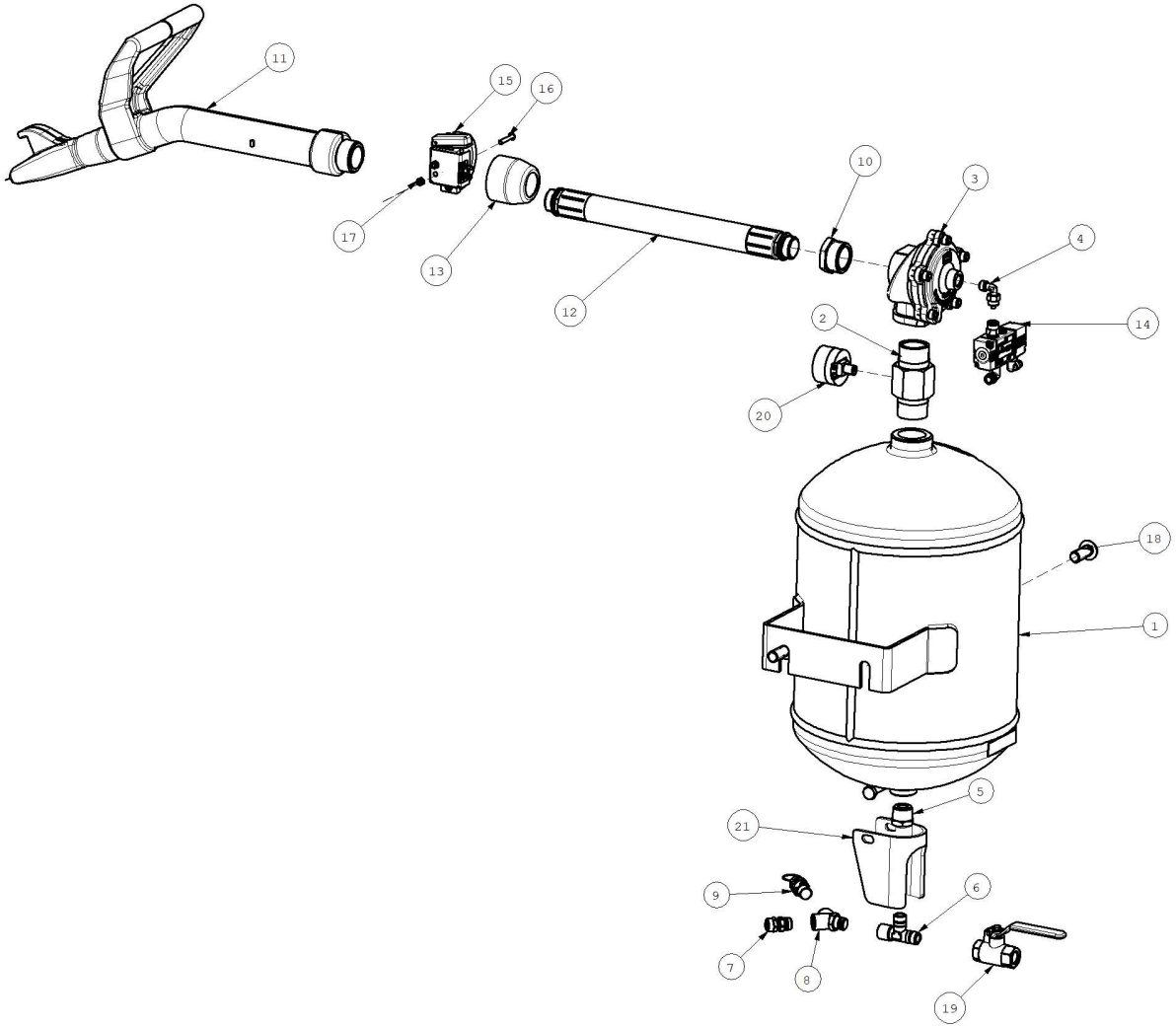

09/2019

Pos	Code	Designation Designazione ОПИСАНИЕ	Désignation Designaciòn	Bezeichnung Designação	N.	Note Nota HOTa	A	B	C
1	EAS2115G63A	TANK INFLATOR "ASME" 16LT GREY R7012 SERBATOIO GT "ASME" 16 lt GRIGIO R7012 РЕСИВЕР 16Л. RAL7012	RESERVOIR GT "ASME" 16 lt GRIS R7012 DEPÓSITO GT "ASME" 16 lt GRIS R7012	TANK GT "ASME" 16 l GRAU R7012 RESERVATÓRIO GT "ASME" 16 lt CINZA R7012	1		X		
2	EAM0091G48A	NIPPLE, CONIC 1" SPEC. NIPPLO CONICO 1" SPEC. НИППЕЛЬ КОНИЧЕСКИЙ 1"	ARRET CONIQUE 1" NIPLE CÓNICO 1"	NIPPEL, KONISCH 1" SPEZIAL BOCAL, CÔNICO 1" ESPECIAL	1	SPECIAL		X	
3	1-29581A	VALVE,AIR-CONTROLLED VALVOLA COMAN.PNEUM. КЛАПАН	SOUPAPE COMAN.PNEUM. VÁLVULA DE MANDO NEUMÁTICO	VENTIL, PNEUMATISCH GESTEUERT VÁLVULA PNEUMÁTICA	1		X		X
4	1-17179A	ELBOW FITTING "L" 4X6 1/4" RACCORDO A VITE A "L" 4X6 1/4" "L" ШТУЦЕР СТАКАНА 4X6 1/4"	RACCORD A L 4X6 1/4" CONEXIÓN DE TORNILLO EN "L" 4X6 1/4"	L-FÖRMIGER-ANSCHLUSS M. GEWINDE 4X6 JUNÇÃO AO PARAFUSO A "L" 4X6 1/4"	1		X		
5	1-19879A	REDUCTION, MF RIDUZIONE MF ПЕРЕХОДНИК MF	REDUCTION MF REDUCCION MF	REDUZIERUNG MF REDUÇÃO MF	1	1-3/8" GAS		X	
6	1-30679A	T FITTING RACCORDO A T ШТУЦЕР "T"	RACCORD EN T CONEXIÓN EN T	T-ANSCHLUSSTÜCK JUNÇAO A T	1	CAMOZZI 1/4 S2050 MMF	X		
7	1-16879A	FITTING STRAIGHT RACCORDO DRITTO ШТУЦЕР ПРЯМОЙ	RACCORD DROIT CONEXIÓN RECTO	GERADE EINVERSCHRAUBUNG 6X8 1/4 JUNÇÃO PADRÃO	1		X		
8	1-30579A	Y FITTING RACCORDO A Y ШТУЦЕР "Y"	RACCORD EN Y CONEXIÓN EN Y	Y-ANSCHLUSSTÜCK JUNÇAO A Y	1	CAMOZZI 1/4 S2040 FFM	X		
9	1-31381A	VALVE, ASME SAFETY, 1/4" BSPT VALVOLA DI SICUREZZA КЛАПАН ASME 1/4"	SOUPAPE DE SURETE VALVULA DE SEGURIDAD	DRUCKENTLASTUNGSVENTIL 1/4" VÁLVULA DE SEGURANÇA	1		X		X
10	1-16179A	REDUCTION MF 1"-3/4 RIDUZIONE MF 1"-3/4" ПЕРЕХОДНИК 1" - 3/4"	REDUCTION MF 1"-3/4 REDUCCION MF 1"-3/4	GETRIEBE MF 1"-3/4 REDUÇÃO MF 1"-3/4	1			X	
11	EAA0345G60A	NOZZLE TI ASSEMBLED UGELLO GT COMPLETO СОПЛО	BUSE GT COMPLET INYECTOR GT COMPLETO	DUESE GT KPL BOCAL GT	1		X		
12	EAA0503G11A	GT HOSE INFLATION ASSEMBLED TUBO GT CRIMPATO ШЛАНГ ВЗРЫВНОЙ НАКАЧКИ В СБОРЕ	TUYAU GT GONFLER ASSEMBLE TUBO GT HINCHADOR ASSEMBLED	GT SCHLAUCH INFLATION ASSEMBLED TUBO GT ENCRESPADO	1			X	
13	EAS2109G90A	NOZZLE TI PROTECTION PROTEZIONE UGELLO GT ЗАЩИТА СОПЛА	PROTECTION BUSE PROTECCIÓN INYECTOR	DÜSENSCHUTZ GT PROTEÇÃO BOCAL	1			X	
14	EAA0357G10A	TUBELESS DRIVE VALVE VALVOLA COMANDO GT КЛАПАН ВЗРЫВНОЙ НАКАЧКИ	SOUPAPE MANDE TUBELESS VALVULA HINCHADO TUBELESS	VENTIL FUELLTUBELESS VALVULA COMANDO GT	1			X	
15	EAA0357G09A	BEAD INFLATOR CONTROL VALVE VALVOLA AZIONAMENTO GT КЛАПАН УПРАВЛЕНИЯ НАКАЧКОЙ	VANNE ACTIONEMMENT DETALLONNER VALVULA ACCIONAMENTO DESTALONADORA	VENTIL, BETRIEB WULSABLOSER VALVULA ACIONAMENTO GT	1			X	
16	1-42509A	SCREW VITE ВИНТ	VIS TORNILLO	SCHRAUBE PARAFUSO	3	M4X25 8K ISO 7380	X		
17	1-9733	SELF LOCKING NUT DADO AUTOBLOCCANTE ГАЙКА САМОКОНТРЯЩАЯСЯ	ECROU AUTOBLOQUANT TUERCA AUTOBLOQUEO	MUTTER, SELBSTSPERREND PORCA AUTOBLOQUEADOR	3	M4		X	

A available - disponible - vorhanden - beschikbaar
disponibile - disponible - disponivel - Доступно

B on request - sur demande - auf Antrag - op aanvraag
a richiesta - a petición - no pedido - По запросу

C suggested - suggeré - vorgeschlagene - aanbevolen
consigliato - sugerido - sugerido - Предлагается

Pos	Code	Designation Designazione ОПИСАНИЕ	Désignation Designaciòn	Bezeichnung Designação	N.	Note Nota HOTa	A	B	C
18	1-58409A	SCREW VITE ВИНТ	VIS TORNILLO	SCHRAUBE PARAFUSO	2	M12X30 8K ISO 7380	X		
19	1-27181A	1/4" BALL VALVE, 600WOG RUBINETTO SCARICO COND. FF 1/4" ШАРИКОВЫЙ КЛАПАН 1/4", ACME	ROBINET EVACUATION DES CONDENSATS LLAVE DESCARGA CONDENSATION 1/4"	KONDENSATWASSERABLASS 1/4" TORNEIRA DESCARGA COND. FF 1/4"	1	ASME	X		
20	8-06620A	GAUGE,1/8"REAR CONNECTION,0-25 bar S MANOMETRO ATTACCO POSTE. 1/8" SCAL МАНОМЕТР 1/8"	MANOMETRE , RACCORD ARRIERE 1/8" SCAL MANÓMETRO CONEXIÓN TRAS. 1/8" SCAL	MANOMETER HINTERER ANSCHLUSS 1/8" MANOMETRO CONEXAO COLUNA. 1/8" SCAL	1			X	
21	EAS2228G21A	PROTECTION PROTEZIONE ЗАЩИТА	PROTECTION PROTECCIÓN	ABDECKUNG PROTEÇÕES	1		X		

A available - disponible - vorhanden - beschikbaar
disponibile - disponible - disponivel - Доступно

B on request - sur demande - auf Antrag - op aanvraag
a richiesta - a petición - no pedido - По запросу

C suggested - suggeré - vorgeschlagene - aanbevolen
consigliato - sugerido - sugerido - Предлагается

EAZ0122G63A.B

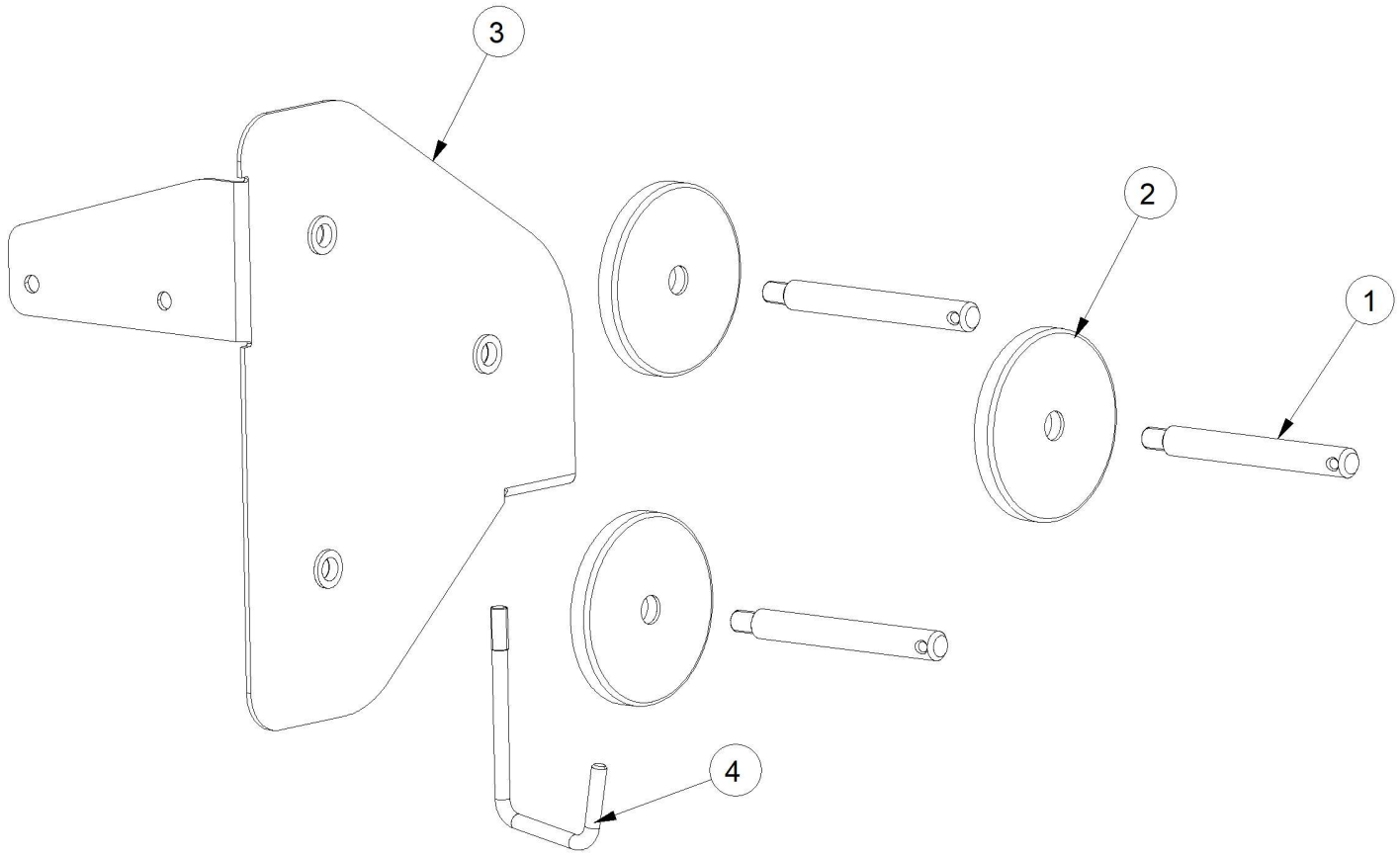

02/2019

Pos	Code	Designation Designazione ОПИСАНИЕ	Désignation Designaciòn	Bezeichnung Designação	N.	Note Nota HOTa	A	B	C
1	EAM0006G01A	FLANGE HOLDER PIN PERNO PORTA FLANGE КРОНШТЕЙН	AXE PORTE-FLASQUES PERNO PORTA BRIDAS	FLANSCHBOLZEN PINO PORTA-FLANGE	3			X	
2	EAC0060G02A	FLANGES PROTECTION PROTEZIONE FLANGE ЗАЩИТНЫЙ БУФЕР	PROTECTION FLASQUES PROTECCIÓN BRIDAS	FLANSCHSCHUTZ PROTEÇÃO FLANGE	3			X	
3	EAA0481G94A	SUPPORTO FOR PEGS SUPPORTO CONI ОПОРА КОНУСОВ	SUPPORT CONES SOPORTE CONOS	KEGELHALTERUNG SUPORTE CONES	1			X	
4	EAM0074G29A	HOOK GANCIO КРЮК	CROCHET GANCHO	HAKEN GANCHO	1			X	

A available - disponible - vorhanden - beschikbaar
disponibile - disponible - disponivel - Доступно

B on request - sur demande - auf Antrag - op aanvraag
a richiesta - a petición - no pedido - По запросу

C suggested - suggeré - vorgeschlagene - aanbevolen
consigliato - sugerido - sugerido - Предлагается

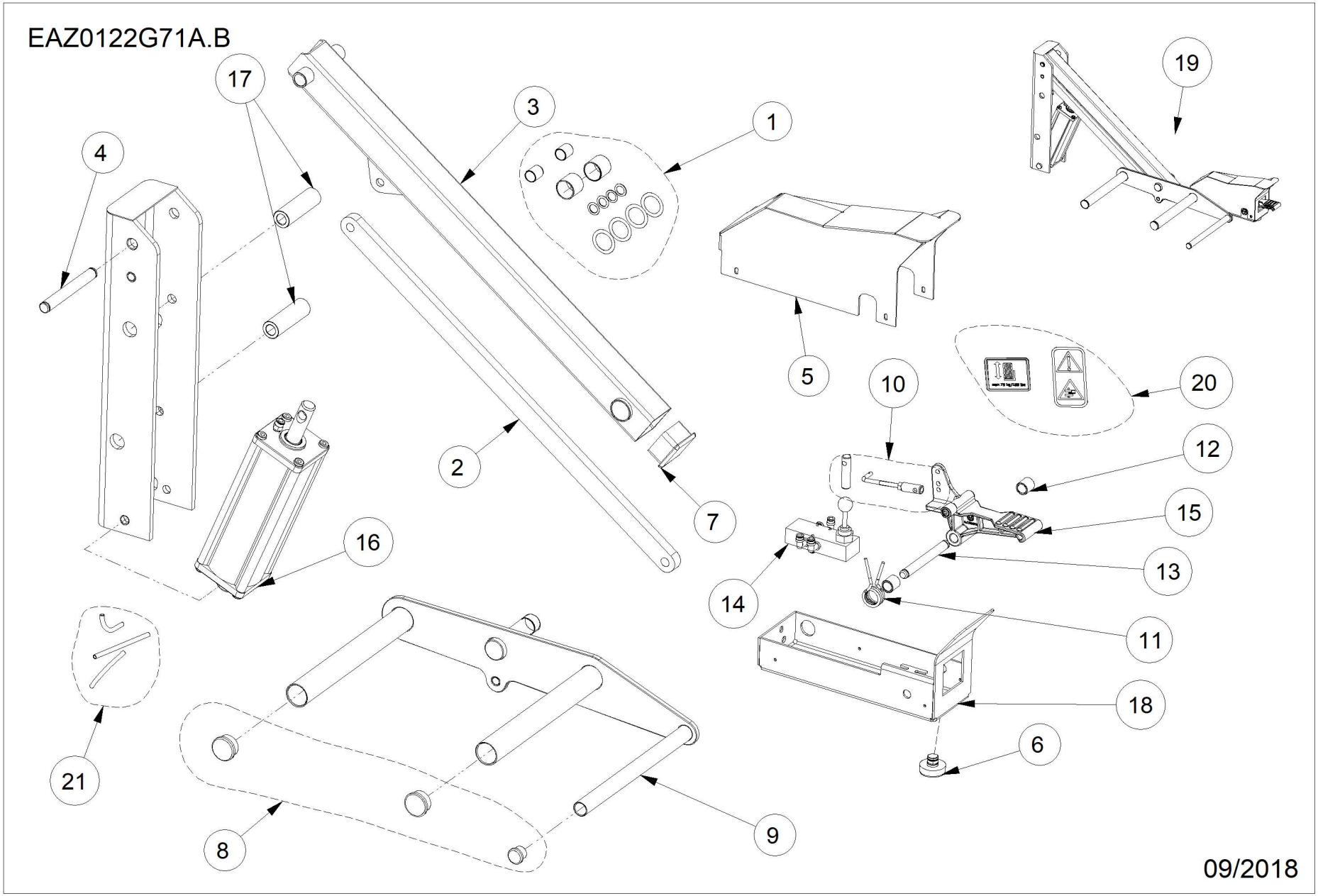
EAZ0122G71A.B
17
3
1
19
4
5
10
20
12
2
15
7
16
13
14
11
18
6
21
8
9
09/2018

Pos	Code	Designation Designazione ОПИСАНИЕ	Désignation Designaciòn	Bezeichnung Designação	N.	Note Nota HOTa	A	B	C
1	EAS2188G56A	COVER CARTER КОЖУХ	CARTER CÁRTER	SCHUTZABDECKUNG CÁRTER	1		X		
2	EAM0056G37A	REACTION ARM BRACCIO REAZIONE РЫЧАГ	BRAS REACTION BRAZO REACCIÓN	REAKTIONSARM BRAÇO REAÇÃO	1			X	
3	EAA0481G91A	WHEEL LIFTER ARM GROUP GRUPPO BRACCIO SOLLEVATORE УЕЛ РЫЧАГА ПОДЪЕМНИКА	GROUPE BRAS ELEVATEUR GRUPO BRAZO ELEVADOR	ARMGRUPPE RADHEBER GRUPO BRAÇO LEVANTADOR	1			X	
4	EAM0056G38A	FULCRUM PIN PERNO DI FULCRO ПАЛЕЦ ЦЕНТРИРУЮЩИЙ	ARBRE PIVOT PERNO DE PIVOTE	DREHZAPFEN PINO DE FULCRO	1			X	
5	EAS2188G56A	COVER CARTER КОЖУХ	CARTER CÁRTER	SCHUTZABDECKUNG CÁRTER	1		X		x
6	EAC0078G30A	SLIDING JAW PROTECTION PROTEZIONE ADATT. SCORREVOLI ЗАЩИТА КУЛАЧКА	PROTECTION COINS COULISSANTS PROTECCIÓN CUNEOS CURSORS	KUNSTSTOFFSCHUTZ SPANNKLAUE PROTEÇÃO ADAPT. CORREDIÇOS	1			X	
7	8-11418A	SQUARE BUMPER TAPPO PER TUBO QUADRO ОПОРА КВАДРАТНАЯ	BOUCHON TUBE CARRE TAPÓN PARA TUBO CUADRADO	VIERECKIGER VERSCHLUSS FÜR ROHR TAMPA PARA TUBO QUADRADO	1	50X50		X	
8	EAK0330G74A	CAPS KIT KIT TAPPI КОМЛЕКТ ЗАГЛУШЕК	KIT BOUCHONS KIT TAPONES	KAPPENSATZ KIT TAMPAS	1			X	
9	EAS2098G49A	WHEEL LIFTER SOLLEVATORE RUOTA ПОДЪЕМНИК ПОЛЕСА	ELEVATEUR ROUE ELEVADOR RUEDA	RADHEBER LEVANTADOR RODA	1			X	
10	EAK0330G73A	LIFTER VALVE LEVER KIT KIT LEVA COMANDO VALVOLA SOLLEVATORI КОМПЛЕКТ РЫЧАГА УПРАВЛЕНИЯ КЛАПАНА	KIT LEVIER COMMANDE VANNE ELEVATEUR KIT PALANCA MANDO VÁLVULA ELEVADOR	VENTILHEBELSATZ HEBEVORRICHTUNG KIT ALAVANCA COMANDO VÁLVULA LEVANTA	1			X	
11	EAM0048G78A	SPRING, PEDAL SWITCH MOLLA PEDALE INTERRUTTORE ПРУЖИНА	RESSORT, PEDAL INTERRUPTEUR MUELLE PEDAL INTERRUPTOR	FEDER F. PEDALSCHALTER MOLA, INTERRUPTOR PEDAL	1		X		X
12	EAM0048G79A	BUSHING, CENTERING- SPRING BOCCOLA CENTRAGGIO MOLLA ЦЕНТРОВОЧНАЯ ВТУЛКА ПРУЖИНЫ	COQUILLE SIEGE RESSORT CASQUILLO CENTRADO MUELLE	BUCHSE ARRUELA CENTRALIZAÇÃO MOLA	2			X	
13	EAM0082G14A	PIN PERNO ПАЛЕЦ	AXE PERNO	STIFT PINO	1			X	
14	EAA0349G00A	VALVE VALVOLA КЛАПАН	SOUPAPE VÁLVULA	VENTIL VÁLVULA	1		X		x
15	EAA0356G92A	RIGHT SWITCH FOOT PEDAL PEDALE SWITCH DX ПЕДАЛЬ ПРАВАЯ	PEDALE INTERRUPTEUR DROIT PEDAL INTERRUPTOR DER.	PEDAL SCHALTER RECHTS PEDAL INTERRP. DIR.	1			X	
16	EAA0344G93A	CYLINDER SQUARE SECTION CILINDO SEZIONE QUADRA ЗАДНЯЯ КРЫШКА ЦИЛИНДРА	VERIN SECTION CARREE CILINDO SECCIÓN CUADRADA	ZYLINDER QUADRATISCHER DURCHSCHNITT CILINDRO SEÇÃO QUADRADA	1	D75	X		x
17	EAM0081G78A	SPACER DISTANZIALE ПРОСТАВКА	ENTRETOISE DISTANCIADOR	ABSTANDSSTÜCK DISTANCIADOR	2			X	

A available - disponible - vorhanden - beschikbaar
disponibile - disponible - disponivel - Доступно

B on request - sur demande - auf Antrag - op aanvraag
a richiesta - a petición - no pedido - По запросу

C suggested - suggeré - vorgeschlagene - aanbevolen
consigliato - sugerido - sugerido - Предлагается

Pos	Code	Designation Designazione ОПИСАНИЕ	Désignation Designaciòn	Bezeichnung Designação	N.	Note Nota HOTa	A	B	C
18	EAS2131G17A	BASE FOR LIFTER PEDAL BASAMENTO PEDALE SOLLEVATORE ОПОРА ПЕДАЛИ ПОДЪЕМНИКА	BATI PEDALE ELEVATEUR BASE PEDAL ELEVADOR	BASIS FÜR PEDAL HEBEVORRICHTUNG BASE PEDAL ELEVADOR	1			X	
19	EAA0377G29A	LIFTER COMPLETE GROUP GRUPPO SOLLEVATORE COMPLETO УЗЕЛ ПОДЪЕМНИКА В СБОРЕ	GROUPE ELEVATEUR COMPLET GRUPO ELEVADOR COMPLETO	HEBEVORRICHTUNGSGRUPPE KOMPLETT GRUPO LEVANTADOR COMPLETO	1			X	
20	EAK0341G10A	WHEEL LIFT LABEL KIT KIT ETICHETTE SOLLEVATORE RUOTA КОМПЛЕКТ ЭТИКЕТОК ПОДЪЕМНИКА КОЛЕС/	KIT ETIQUETTES ELEVATEUR ROUE KIT ETIQUETAS ELEVADOR RUEDA	ETIKETTENSATZ RADHEBER KIT ETIQUETAS LEVANTADOR RODA	1		X		
21	EAK0341G24A	SET HOSES FOR LIFT KIT TUBI SOLLEVATORE КОМПЛЕКТ ПНЕВМОШЛАНГОВ	KIT TUBES ELEVATEUR KIT TUBOS ELEVADOR	KIT SCHLÄUCHE RADHEBER KIT TUBOS ELEVADOR	1			X	

A available - disponible - vorhanden - beschikbaar
disponibile - disponible - disponivel - Доступно

B on request - sur demande - auf Antrag - op aanvraag
a richiesta - a petición - no pedido - По запросу

C suggested - suggeré - vorgeschlagene - aanbevolen
consigliato - sugerido - sugerido - Предлагается

EAZ0122G53A.B

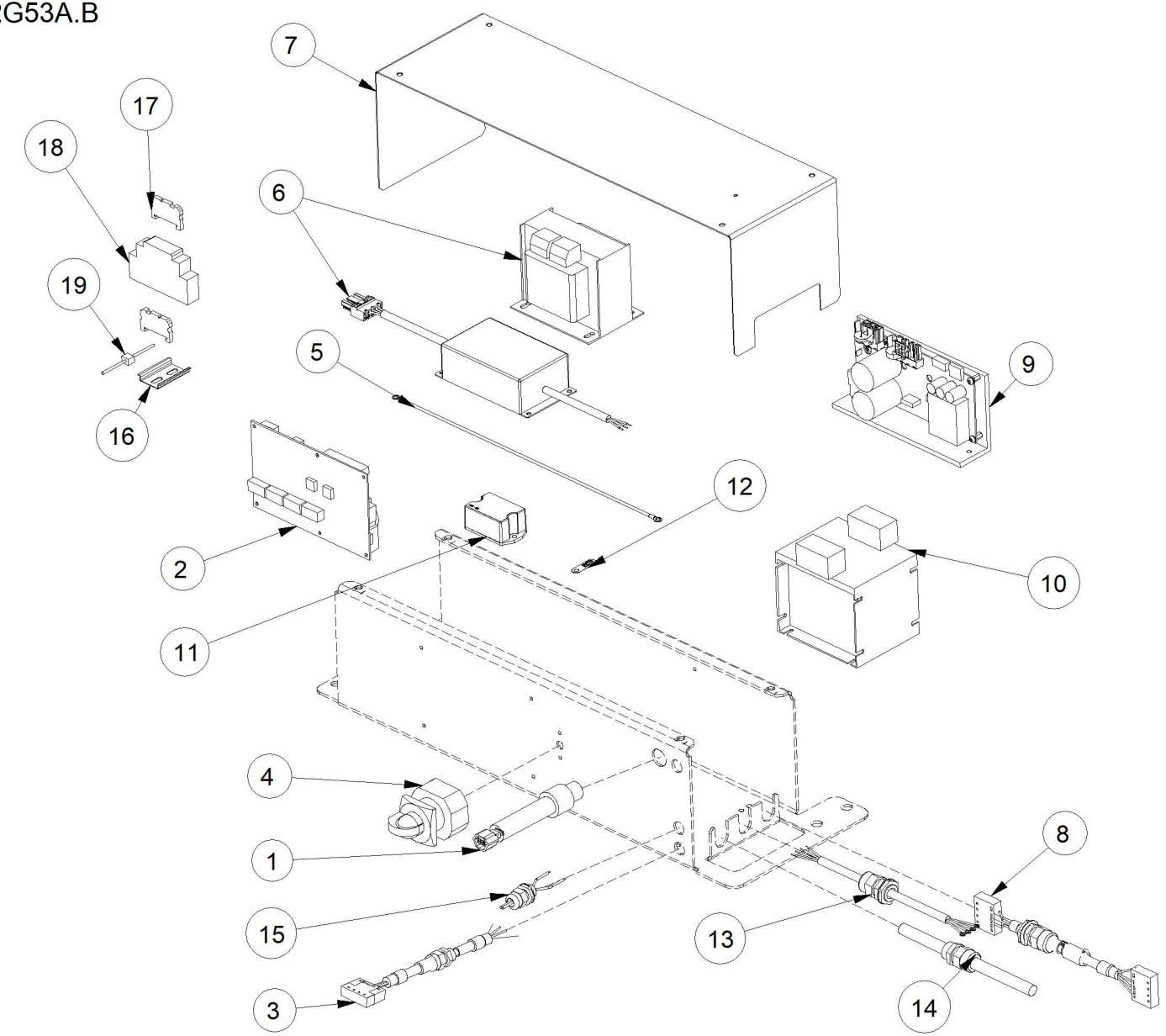

10/2018

Pos	Code	Designation Designazione ОПИСАНИЕ	Désignation Designaciòn	Bezeichnung Designação	N.	Note Nota HOTa	A	B	C
1	EAW0283G97A	CONTROL HARNESS CABLAGGIO COMANDI КАБЕЛЬНАЯ ПРОВОДКА УПРАВЛЕНИЯ	CABLAGE COMMANDES CABLEADO MANDOS	STEUERUNGSVERKABELUNG CABAGEM COMANDOS	1			X	
2	EAP0290G80A	CONTROL BOARD SCHEDA COMANDI СХЕМА УПРАВЛЕНИЯ	CARTE COMMANDES ESQUEDA MANDOS	STEUERPLATINE FICHA COMANDOS	1		X		X
3	EAW0283G98A	ACTUATOR MOTOR CABLE CAVO MOTORE ATTUATORE КАБЕЛЬ ДВИГАТЕЛЯ ИСПОЛНИТЕЛЬНОГО МЕ	CABLE MOTEUR ACTIONNEUR CABLE MOTOR ACTUADOR	KABEL STELLANTRIEB CABO MOTOR ATUADOR	1			X	
4	2-14861A	BIPOLAR POWER SWITCH INTERRUTTORE BIPOLARE 25A БИПОЛЯРНЫЙ ВЫКЛЮЧАТЕЛЬ ПИТАНИЯ	INTERRUPTEUR BIPOLAIRE 25A INTERRUPTOR BIPOLAR 25A	ZWEIPOLIGER SCHALTER 25A INTERRUTTOR BIPOLAR 25A	1		X		X
5	EAW0286G15A	GROUND CABLE L=400MM CAVO DI TERRA L=400MM КАБЕЛЬ ЗАЗЕМЛЕНИЯ Д=400ММ	CABLE DE TERRE L=400 MM CABLE DE TIERRA L=400MM	MASSEKABEL L=400 mm CABO DE TERRA L=400MM	1			X	
6	7-02602A	AUTOTRANSFORMER AUTOTRASFORMATORE АВТОТРАНСФОРМ. 220В/230В 1400ВА	AUTOTRANSFORMATEUR AUTOTRANSFORMADOR	SPARTRANSFORMATOR AUTOTRANSFORMADOR	1	200VAC/230VAC 1400VA	X		
6	EAA0426G59A	SUPPRESSOR WITH SHORT CABLES GRUPPO FILTRO CON CAVI CORTI УЗЕЛ ФИЛЬТРА С КОРОТКИМИ КАБЕЛЯМИ	GROUPE FILTRE AVEC CABLES COURTS GRUPO FILTRO CON CABLES CORTOS	UNTERDRÜCKERGRUPPE MIT KURZEN KABEL GRUPO FILTRO COM CABOS CURTOS	1			X	
7	EAS2169G79A	ELECTRIC BOX COVER COPERCHIO CASSETTA ELETTRICA КРЫШКА ЭЛЕКТРОЩИТА	COUVERCLE BOITIER ELECTRIQUE TAPA CUADRO ELÉCTRICO	ABDECKUNG STROMKASTEN TAMPA DO ARMÁRIO ELÉTRICO	1			X	
8	EAW0283G90A	INVERTER MOTOR CABLE CAVO MOTORE INVERTER КАБЕЛЬ ДВИГАТЕЛЯ ИНВЕРТОРА	CABLE MOTEUR ONDULEUR CABLE MOTOR INVERSOR	KABEL INVERTERMOTOR CABO MOTOR INVERTER	1			X	
9	EAA0503G74A	ENHANCED INVERTER ASSEMBLY ASSIEME INVERTER AVANZATO КОМПЛЕКТ УЛУЧШЕННОГО ИНВЕРТОРА	ENSEMBLE ONDULEUR AVANCE CONJUNTO INVERSOR AVANZADO	BAUGRUPPE ERWEITERTER INVERTER CONJUNTO INVERTER AVANÇADO	1		X		X
10	7-16401A	POWER TRANSFORMER TRASFORMATORE ТРАНСФОРМАТОР 115-230В/40В 400Вт	TRANSFORMATEUR TRANSFORMADOR	TRAFO TRANSFORMADOR	1	115-230VAC 40VAC 400VA	X		X
11	2-28840A	RECTIFIER BRIDGE 400V 86A PONTE RADDRIZZATORE 400V 86A ДИОДНЫЙ МОСТ 400В 86А	PONT REDRESSEUR 400V 86A PUENTE RECTIFICADOR 400V 86A	BRÜCKENGLEICHRICHTER 400 V 86A PONTE RETIFICADORA 400V 86A	1	400V 86A		X	
12	EAL0413G31A	GROUND LABEL TARGHETTA SIMBOLO TERRA НАКЛЕЙКА ЗАЗЕМЛЕНИЯ	SIGNAL TERRE TARJETA SÍMBOLO TIERRA	SCHILD MIT ERDUNGSSYMBOL PLACA SÍMBOLO TERRA	1			X	
13	EAW0282G14A	MAINS CABLE CAVO ALIMENTAZIONE КАБЕЛЬ ПИТАНИЯ	CABLE ALIMENTATION CABLE DE ALIMENTACIÓN	KABEL STROMVERSORGUNG CABO ALIMENTAÇÃO	1			X	
14	EAW0283G99A	48V MOTOR CABLE CAVO MOTORE 48V КАБЕЛЬ ДВИГАТЕЛЯ 48В	CABLE MOTEUR 48V CABLE MOTOR 48V	MOTORKABEL 48V CABO MOTOR 48V	1			X	
15	EAW0283G39A	POWER SUPPLY AND VIDEO CABLE CAVO ALIMENTAZIONE E VIDEO КАБЕЛЬ ПИТАНИ И ВИДЕО	CABLE ALIMENTATION ET VIDEO CABLE ALIMENTACIÓN Y VÍDEO	KABEL STROMVERSORGUNG UND VIDEO CABO DE ALIMENTAÇÃO E VIDEO	1	OPTION		X	
15					1				

A available - disponible - vorhanden - beschikbaar
disponibile - disponible - disponivel - Доступно

B on request - sur demande - auf Antrag - op aanvraag
a richiesta - a petición - no pedido - По запросу

C suggested - suggeré - vorgeschlagene - aanbevolen
consigliato - sugerido - sugerido - Предлагается

Pos	Code	Designation Designazione ОПИСАНИЕ	Désignation Designaciòn	Bezeichnung Designação	N.	Note Nota HOTa	A	B	C
16	2-49766A	DRILLED ROD NS 35/7,5 BARRA FORATA NS 35/7,5 ОСЬ С ОТВЕРСТИЕМ NS 35/7,5	TIGE PERFOREE NS 35/7,5 BARRA PERFORADA NS35/7,5	TRAGSCHIENE 2M NS 35/7,5 GELOCHT BARRA FURADA NS 35/7,5	1	OPTION NS 35/7,5		X	
17	2-07533A	BLOCK, TERMINAL BOARD BLOCCO TERMINALE ЗАГЛУШКА БЛОКА КОНТАКТОВ	BUTEE BOITE A BORNES BLOQUEO TERMINAL	BLOCK KLEMMBRETT BLOQUEIO, BORDA TERMINAL	2	OPTION		X	
18	2-75266A	12VDC 10W POWER SUPPLY ALIMENTATORE 12VDC 10W ПИТАТЕЛЬ 12VDC 10Вт	ALIMENTATEUR 12 VCC 10 W ALIMENTADOR 12CC 10W	NETZGERÄT 12VDC 10W ALIMENTADOR 12VDC 10W	1	OPTION		X	
19	EAW0283G87A	POWER SUPPLY CABLE CAVO ALIMENTATORE КАБЕЛЬ ПИТАНИЯ	CABLE ALIMENTATEUR CABLE ALIMENTADOR	NETZGERÄTKABEL CABO ALIMENTADOR	1	OPTION		X	

A available - disponible - vorhanden - beschikbaar
disponibile - disponible - disponivel - Доступно

B on request - sur demande - auf Antrag - op aanvraag
a richiesta - a petición - no pedido - По запросу

C suggested - suggeré - vorgeschlagene - aanbevolen
consigliato - sugerido - sugerido - Предлагается

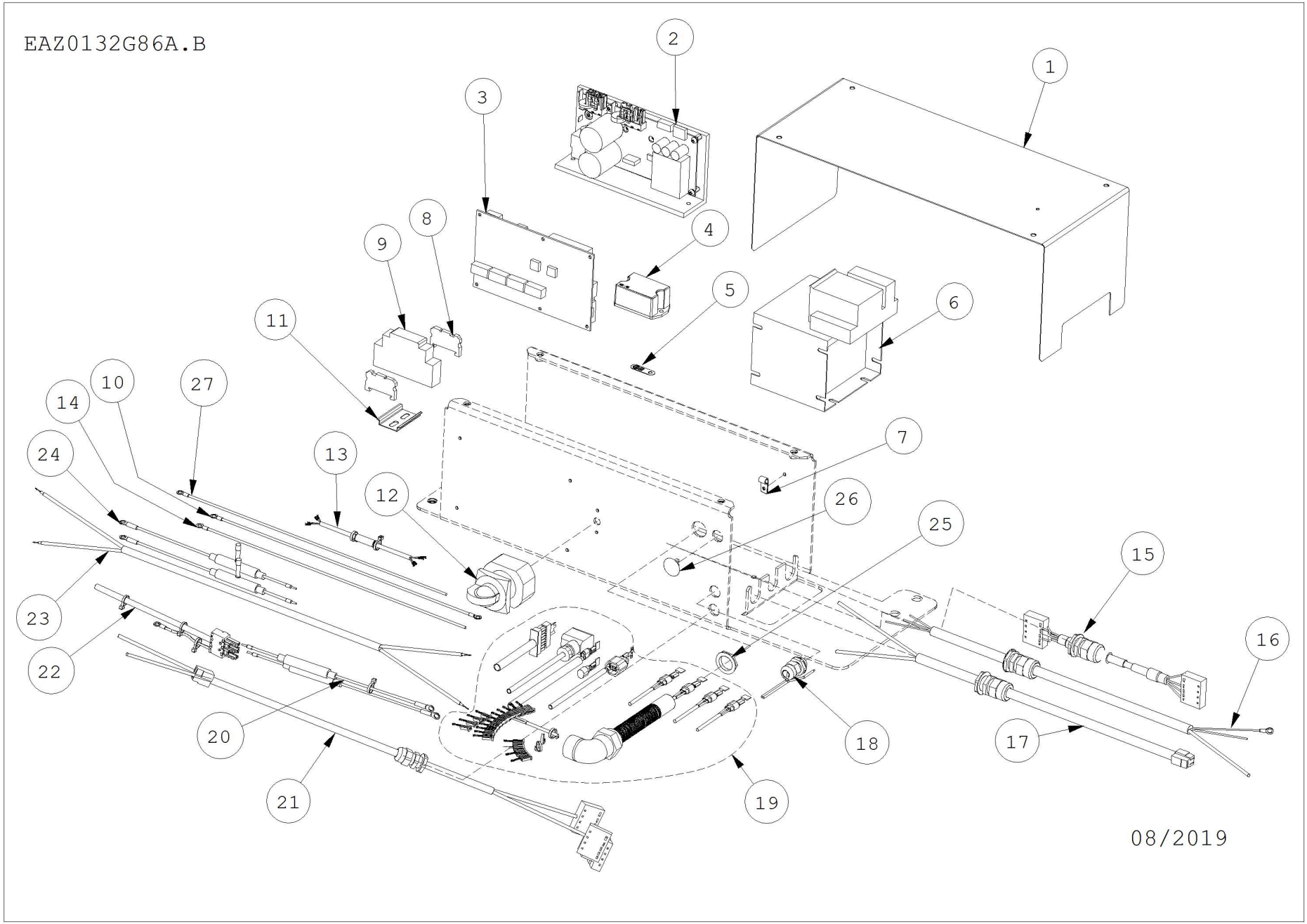
EAZ0132G86A.B
1
2
3
4
5
6
7
8
9
10
11
12
13
14
15
16
17
18
19
20
21
22
23
24
25
26
27
08/2019

Pos	Code	Designation Designazione ОПИСАНИЕ	Désignation Designaciòn	Bezeichnung Designação	N.	Note Nota HOTa	A	B	C
1	EAS2169G92A	ELECTRIC BOX COVER COPERCHIO CASSETTA ELETTRICA КРЫШКА ЭЛЕКТРОЩИТА	COUVERCLE BOITIER ELECTRIQUE TAPA CUADRO ELÉCTRICO	ABDECKUNG STROMKASTEN TAMPA DO ARMÁRIO ELÉTRICO	1			X	
2	EAA0503G74A	ENHANCED INVERTER ASSEMBLY ASSIEME INVERTER AVANZATO КОМПЛЕКТ УЛУЧШЕННОГО ИНВЕРТОРА	ENSEMBLE ONDULEUR AVANCE CONJUNTO INVERSOR AVANZADO	BAUGRUPPE ERWEITERTER INVERTER CONJUNTO INVERTER AVANÇADO	1		X		X
3	EAP0290G80A	CONTROL BOARD SCHEDA COMANDI СХЕМА УПРАВЛЕНИЯ	CARTE COMMANDES ESQUEDA MANDOS	STEUERPLATINE FICHA COMANDOS	1		X		X
4	2-28840A	RECTIFIER BRIDGE 400V 86A PONTE RADDRIZZATORE 400V 86A ДИОДНЫЙ МОСТ 400В 86А	PONT REDRESSEUR 400V 86A PUENTE RECTIFICADOR 400V 86A	BRÜCKENGLEICHRICHTER 400 V 86A PONTE RETIFICADORA 400V 86A	1	400V 86A		X	
5	EAL0413G31A	GROUND LABEL TARGHETTA SIMBOLO TERRA НАКЛЕЙКА ЗАЗЕМЛЕНИЯ	SIGNAL TERRE TARJETA SÍMBOLO TIERRA	SCHILD MIT ERDUNGSSYMBOL PLACA SÍMBOLO TERRA	1			X	
6	7-17701A	POWER TRANSFORMER 115-230VAC UL-CSA TRASFORMATORE 115-230VAC/40VAC 400VA ТРАНСФОРМАТОР 115-230В UL-CSA	POWER TRANSFORMER 115-230VAC UL-CSA POWER TRANSFORMER 115-230VAC UL-CSA	TRANSFORMER TRANSFORMADOR 115-230VAC/40VAC 400VA	1	CSA version	X		
7	5-08745A	ALUMINIUM CABLE CLIP CLIP PER CAVI IN ALLUMINIO ФИКСАТОР КАБЕЛЯ АЛЮМИНИЕВЫЙ	CLIP POUR CABLES ALUMINIUM CLIP PARA CABLES DE ALUMINIO	KLAMMER FÜR KABEL AUS ALUMINIUM CLIP PARA CABOS EM ALUMÍNIO	1			X	
8	2-07533A	BLOCK, TERMINAL BOARD BLOCCO TERMINALE ЗАГЛУШКА БЛОКА КОНТАКТОВ	BUTEE BOITE A BORNES BLOQUEO TERMINAL	BLOCK KLEMMBRETT BLOQUEIO, BORDA TERMINAL	2	OPTION		X	
9	2-75266A	12VDC 10W POWER SUPPLY ALIMENTATORE 12VDC 10W ПИТАТЕЛЬ 12VDC 10Вт	ALIMENTATEUR 12 VCC 10 W ALIMENTADOR 12CC 10W	NETZGERÄT 12VDC 10W ALIMENTADOR 12VDC 10W	1	OPTION		X	
10	EAW0286G15A	GROUND CABLE L=400MM CAVO DI TERRA L=400MM КАБЕЛЬ ЗАЗЕМЛЕНИЯ Д=400ММ	CABLE DE TERRE L=400 MM CABLE DE TIERRA L=400MM	MASSEKABEL L=400 mm CABO DE TERRA L=400MM	1			X	
11	2-49766A	DRILLED ROD NS 35/7,5 BARRA FORATA NS 35/7,5 ОСЬ С ОТВЕРСТИЕМ NS 35/7,5	TIGE PERFOREE NS 35/7,5 BARRA PERFORADA NS35/7,5	TRAGSCHIENE 2M NS 35/7,5 GELOCHT BARRA FURADA NS 35/7,5	1	OPTION NS 35/7,5		X	
12	2-14861A	BIPOLAR POWER SWITCH INTERRUTTORE BIPOLARE 25A БИПОЛЯРНЫЙ ВЫКЛЮЧАТЕЛЬ ПИТАНИЯ	INTERRUPTEUR BIPOLAIRE 25A INTERRUPTOR BIPOLAR 25A	ZWEIPOLIGER SCHALTER 25A INTERRUTTOR BIPOLAR 25A	1		X		
13	EAW0286G80A	CABLE CAVO КАБЕЛЕМ	CABLE CABLE	KABEL CABO	1	RS-485 UL/CSA	X		
14	EAW0286G88A	GROUNDING CABLE L=350 UL/CSA CAVO PER MESSA A TERRA КАБЕЛЬ ЗАЗЕМЛЕНИЯ	CABLE MISE A TERRE CABLE TOMA A TIERRA	ERDUNG KABEL CABO PARA LIGACAO TERRA	1	L=350 UL/CSA	X		
15	EAW0283G91A	INVERTER MOTOR CABLE CAVO MOTORE INVERTER КАБЕЛЬ ДВИГАТЕЛЯ ИНВЕРТОРА	CABLE MOTEUR ONDULEUR CABLE MOTOR INVERSOR	KABEL INVERTERMOTOR CABO MOTOR INVERTER	1	UL	X		
16	EAW0286G81A	MAINS CABLE CAVO ALIMENTAZIONE КАБЕЛЬ ПИТАНИЯ	CABLE ALIMENTATION CABLE DE ALIMENTACIÓN	KABEL STROMVERSORGUNG CABO ALIMENTAÇÃO	1	UL/CSA	X		
17	EAW0286G83A	48V MOTOR CABLE UL/CSA CAVO MOTORE 48V КАБЕЛЬ ДВИГАТЕЛЯ 48В	CABLE MOTEUR 48V CABLE MOTOR 48V	MOTORKABEL 48V CABO MOTOR 48V	1	UL/CSA	X		

A available - disponible - vorhanden - beschikbaar
disponibile - disponible - disponivel - Доступно

B on request - sur demande - auf Antrag - op aanvraag
a richiesta - a petición - no pedido - По запросу

C suggested - suggeré - vorgeschlagene - aanbevolen
consigliato - sugerido - sugerido - Предлагается

Pos	Code	Designation Designazione ОПИСАНИЕ	Désignation Designaciòn	Bezeichnung Designação	N.	Note Nota HOTa	A	B	C
18	EAW0283G39A	POWER SUPPLY AND VIDEO CABLE CAVO ALIMENTAZIONE E VIDEO КАБЕЛЬ ПИТАНИ И ВИДЕО	CABLE ALIMENTATION ET VIDEO CABLE ALIMENTACIÓN Y VÍDEO	KABEL STROMVERSORGUNG UND VIDEO CABO DE ALIMENTAÇÃO E VIDEO	1	OPTION		X	
19	EAW0286G87A	CONTROL HARNESS CABLAGGIO COMANDI КАБЕЛЬНАЯ ПРОВОДКА УПРАВЛЕНИЯ	CABLAGE COMMANDES CABLEADO MANDOS	STEUERUNGSVERKABELUNG CABAGEM COMANDOS	1	UL/CSA	X		
20	EAW0286G79A	CONTROLLER BOARD SUPPLY CABLE UL/CSA CAVO ALIMENTAZIONE SCHEDA КАБЕЛЬ ПИТАНИЯ ПЛАТА	CARTE ALIMENTATION CABLE TARJETA ALIMENTACIÓN CABLE	KABEL PLATINE STROMVERSORGUNG CABO ALIMENTAÇÃO PLACA	1	UL/CSA	X		
21	EAW0286G84A	ACTUATOR MOTOR CABLE CAVO MOTORE ATTUATORE КАБЕЛЬ ДВИГАТЕЛЯ ИСПОЛНИТЕЛЬНОГО МЕ	CABLE MOTEUR ACTIONNEUR CABLE MOTOR ACTUADOR	KABEL STELLANTRIEB CABO MOTOR ATUADOR	1	UL/CSA	X		
22	EAW0286G82A	INVERTER POWER SUPPLY CABLE UL/CSA CAVO ALIMENTAZIONE INVERTER ИНВЕРТЕР КАБЕЛЬ ПИТАНИЯ ПЛАТА	CONVERTISSEUR ALIMENTATION CABLE CABLE ALIMENTACIÓN INVERSOR	INVERTER STROMVERSORGUNG KABEL CABO ALIMENTAÇÃO INVERTER	1	UL/CSA	X		
23	EAW0286G85A	POWER SUPPLY CABLE CAVO DI ALIMENTAZIONE КАБЕЛЬ ПИТАНИЯ	CABLE SECTEUR CABLE ELÉCTRICO	NETZKABEL CABO DE ALIMENTAÇÃO	1	UL/CSA	X		
24	EAW0286G78A	BRIDGE RECTIFIER CABLE CAVO PONTE RADDRIZZATORE ДИОДНЫЙ МОСТ	CABLE PONT DE REDRESSEMENT CABLE PUENTE RECTIFICADOR	BRÜCKENGLEICHRICHTER KABEL CABO PONTE RETIFICADOR	2	UL/CSA	X		
25	1-04783A	HEXAGONAL LOCKNUT DADO ESAGONALE ГАЙКА	ECROU HEXAGONALE TUERCA HEXAGONAL	SECHSKANTMUTTER PORCA HEXAGONAL	1	M20X1.5 BLACK		X	
26	1-09076A	CAP CLOSING TAPPO CHIUSURA ЗАГЛУШКА	COUVERCLE FERMETURE TAPA CIERRE	STOPFEN TAMPA DE FECHAMENTO	0	D.14>D.21 E.CO 50486	X		
27	EAW0286G93A	TRANSFORMER GROUNDING CABLE UL/CSA CAVO PER MESSA A TERRA TRASFORMATOF КАБЕЛЬ ЗАЗЕМЛЕНИЯ	CABLE MISE A TERRE CABLE TOMA A TIERRA	ERDUNG KABEL CABO PARA LIGACAO TERRA	1		X		

A available - disponible - vorhanden - beschikbaar
disponibile - disponible - disponivel - Доступно

B on request - sur demande - auf Antrag - op aanvraag
a richiesta - a petición - no pedido - По запросу

C suggested - suggeré - vorgeschlagene - aanbevolen
consigliato - sugerido - sugerido - Предлагается

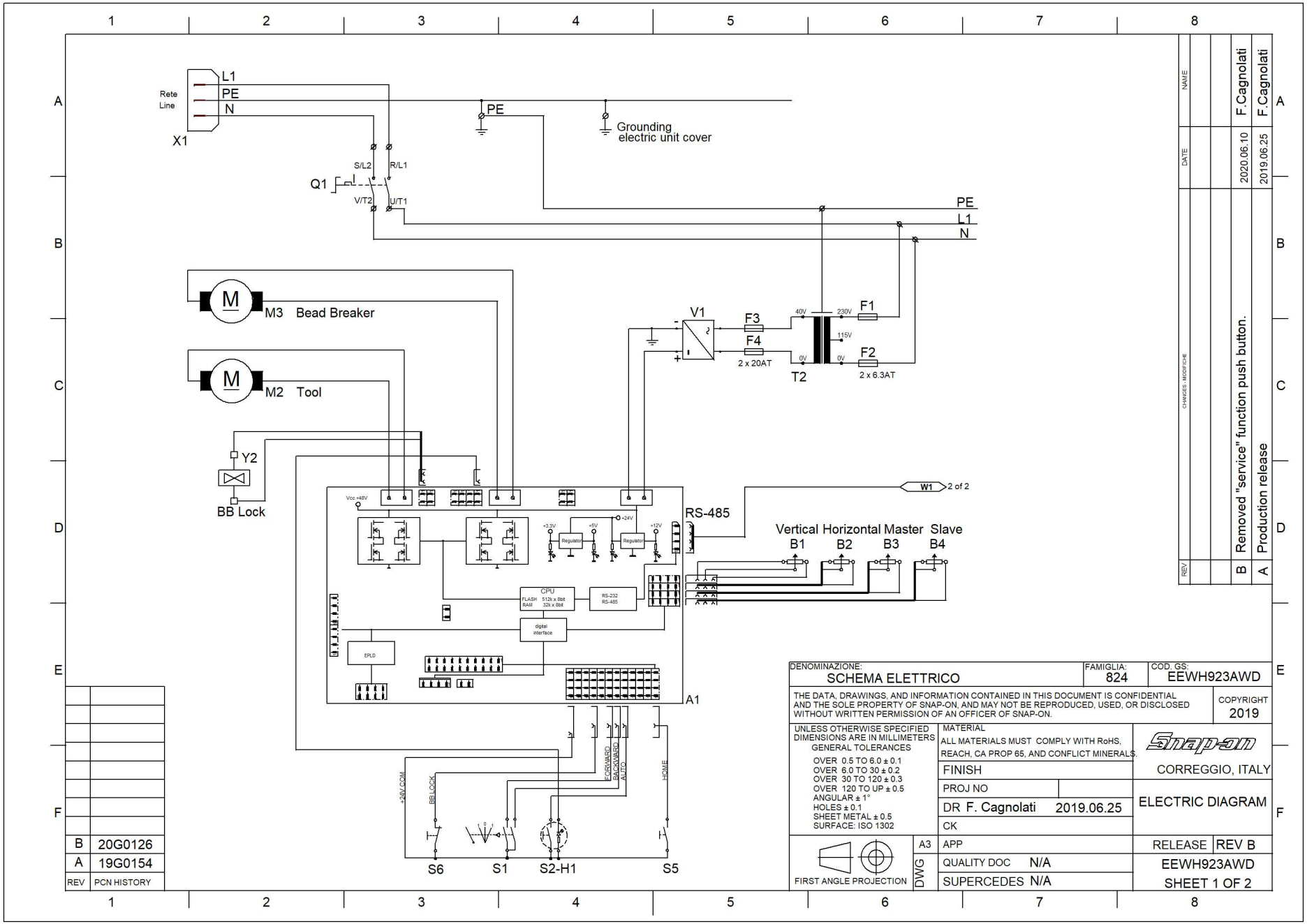
Rete
Line
L1
PE
N
X1
PE
Grounding
electric unit cover
S/L2
R/L1
Q1
V/T2
U/T1
PE
L1
N
M
M3 Bead Breaker
M
M2 Tool
Y2
BB Lock
V1
F3
F4
2 x 20AT
40V
230V
F1
115V
0V
0V
F2
2 x 6.3AT
T2
W1 2 of 2
RS-485
Vertical Horizontal Master Slave
B1 B2 B3 B4
Vcc +48V
+3.3V
+5V
+24V
+12V
Regulator
Regulator
CPU
FLASH 512k x 8bit
RAM 32k x 8bit
RS-232
RS-485
digital
interface
EPLD
A1
+24V COM
BB LOCK
FORWARD
BACKWARD
AUTO
HOME
S6
S1
S2-H1
S5
1
2
3
4
5
6
7
8
A
B
C
D
E
F
NAME
DATE
CHANGES - MODIFICHE
REV
F.Cagnolati
F.Cagnolati
2020.06.10
2019.06.25
B
Removed "service" function push button.
A
Production release
B 20G0126
A 19G0154
REV PCN HISTORY
DENOMINAZIONE:
SCHEMA ELETTRICO
FAMIGLIA:
824
COD. GS:
EEWH923AWD
THE DATA, DRAWINGS, AND INFORMATION CONTAINED IN THIS DOCUMENT IS CONFIDENTIAL AND THE SOLE PROPERTY OF SNAP-ON, AND MAY NOT BE REPRODUCED, USED, OR DISCLOSED WITHOUT WRITTEN PERMISSION OF AN OFFICER OF SNAP-ON.
COPYRIGHT
2019
UNLESS OTHERWISE SPECIFIED DIMENSIONS ARE IN MILLIMETERS
GENERAL TOLERANCES
OVER 0.5 TO 6.0 ± 0.1
OVER 6.0 TO 30 ± 0.2
OVER 30 TO 120 ± 0.3
OVER 120 TO UP ± 0.5
ANGULAR ± 1°
HOLES ± 0.1
SHEET METAL ± 0.5
SURFACE: ISO 1302
MATERIAL
ALL MATERIALS MUST COMPLY WITH RoHS, REACH, CA PROP 65, AND CONFLICT MINERALS.
FINISH
PROJ NO
DR F. Cagnolati 2019.06.25
CK
Snap-on
CORREGGIO, ITALY
ELECTRIC DIAGRAM
FIRST ANGLE PROJECTION
DWG
A3
APP
QUALITY DOC N/A
SUPERCEDES N/A
RELEASE REV B
EEWH923AWD
SHEET 1 OF 2

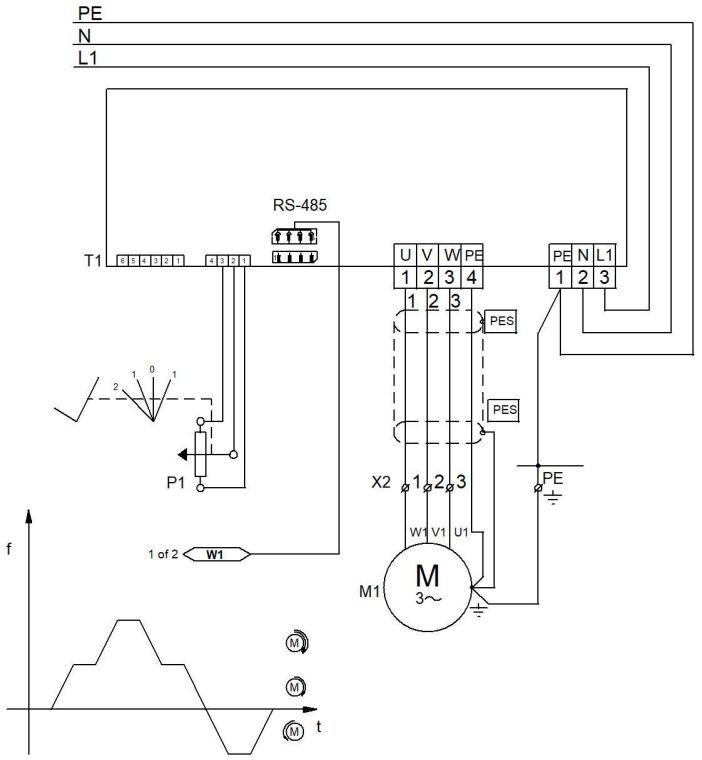

M	M		M	
2	1	0	1	

Potentiometer table
Tabella potenziometro

A1	Main board	Scheda comando
B1	Vertical Movement pot.	Pot. Movimento Verticale
B2	Horizontal Movement pot.	Pot. Movimento Orizzontale
B3	Bead Breaker Master pot.	Pot. Stallonatore Master
B4	Bead Breaker Slave pot.	Pot. Stallonatore Slave
F1	Primary transf. fuse	Fusibile primario trasformatore
F2	Primary transf. fuse	Fusibile primario trasformatore
F3	Secondary transf. fuse	Fusibile secondario trasformatore
F4	Secondary transf. fuse	Fusibile secondario trasformatore
H1	LED AUTO	LED AUTO
M1	Chuck motor	Motore autocentrante
M2	Tool motor	Motore utensile
M3	Bead breaker motor	Motore stallonatore
Q1	Main switch	Interruttore principale
P1	Speed potentiometer	Potenziometro velocità
S1	Tool joystick	Joystick utensile
S2	AUTO push button	Pulsante AUTO
S5	HOME push button	Pulsante HOME
S6	BB LOCK switch	Interruttore BB LOCK
T1	Inverter	Inverter
T2	Transformer	Trasformatore
X1	Main plug	Spina di alimentazione
X2	Motor terminal block	Morsettiera motore
Y2	Electric valve BB Lock	Elettrovalvola BB Lock
V1	Rectifier bridge	Ponte raddrizzatore

DENOMINAZIONE: SCHEMA ELETTRICO	FAMIGLIA: 824	COD. GS: EEWH923AWD	
THE DATA, DRAWINGS, AND INFORMATION CONTAINED IN THIS DOCUMENT IS CONFIDENTIAL AND THE SOLE PROPERTY OF SNAP-ON, AND MAY NOT BE REPRODUCED, USED, OR DISCLOSED WITHOUT WRITTEN PERMISSION OF AN OFFICER OF SNAP-ON.		COPYRIGHT 2019	
UNLESS OTHERWISE SPECIFIED DIMENSIONS ARE IN MILLIMETERS GENERAL TOLERANCES OVER 0.5 TO 6.0 ± 0.1 OVER 6.0 TO 30 ± 0.2 OVER 30 TO 120 ± 0.3 OVER 120 TO UP ± 0.5 ANGULAR ± 1° HOLES ± 0.1 SHEET METAL ± 0.5 SURFACE: ISO 1302	MATERIAL ALL MATERIALS MUST COMPLY WITH RoHS, REACH, CA PROP 65, AND CONFLICT MINERALS.	Snap-on CORREGGIO, ITALY	
	FINISH		
	PROJ NO	ELECTRIC DIAGRAM	
	DR F. Cagnolati 2019.06.25		
	CK		
FIRST ANGLE PROJECTION	A3 APP	RELEASE REV B	
	DWG QUALITY DOC N/A	EEWH923AWD	
	SUPERCEDES N/A	SHEET 2 OF 2	

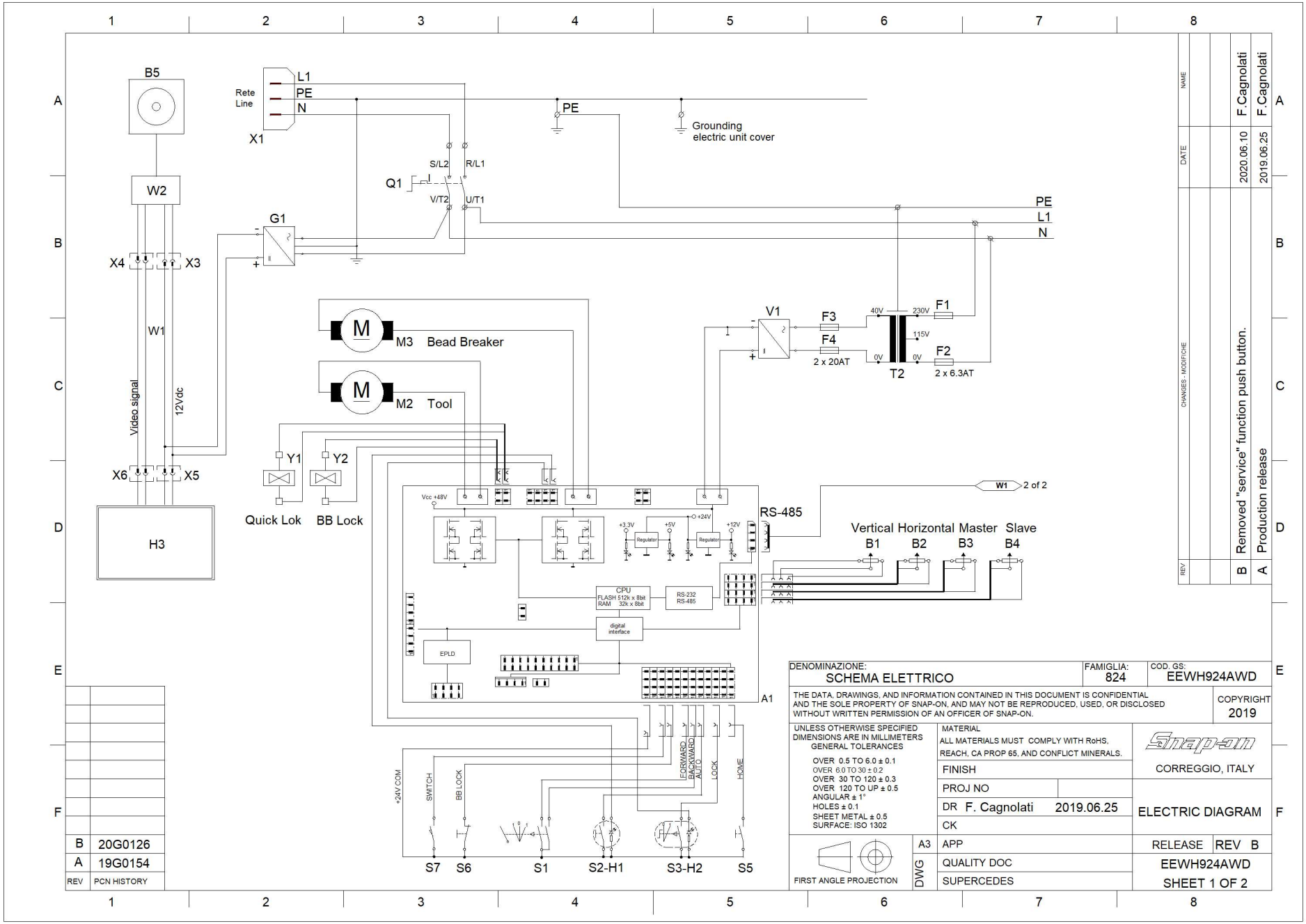

REV	NAME	DATE	CHANGES - MODIFICHE
B	F.Cagnolati	2020.06.10	Removed "service" function push button.
A	F.Cagnolati	2019.06.25	Production release

REV	PCN HISTORY
B	20G0126
A	19G0154

DENOMINAZIONE: SCHEMA ELETTRICO
FAMIGLIA: 824
COD. GS: EEWH924AWD

THE DATA, DRAWINGS, AND INFORMATION CONTAINED IN THIS DOCUMENT IS CONFIDENTIAL AND THE SOLE PROPERTY OF SNAP-ON, AND MAY NOT BE REPRODUCED, USED, OR DISCLOSED WITHOUT WRITTEN PERMISSION OF AN OFFICER OF SNAP-ON.
COPYRIGHT 2019

UNLESS OTHERWISE SPECIFIED DIMENSIONS ARE IN MILLIMETERS
GENERAL TOLERANCES
OVER 0.5 TO 6.0 ± 0.1
OVER 6.0 TO 30 ± 0.2
OVER 30 TO 120 ± 0.3
OVER 120 TO UP ± 0.5
ANGULAR ± 1°
HOLES ± 0.1
SHEET METAL ± 0.5
SURFACE: ISO 1302

MATERIAL
ALL MATERIALS MUST COMPLY WITH RoHS, REACH, CA PROP 65, AND CONFLICT MINERALS.
FINISH
PROJ NO
DR F. Cagnolati 2019.06.25
CK

Snap-on
CORREGGIO, ITALY
ELECTRIC DIAGRAM

FIRST ANGLE PROJECTION
A3
DWG
APP
QUALITY DOC
SUPERCEDES

RELEASE REV B
EEWH924AWD
SHEET 1 OF 2

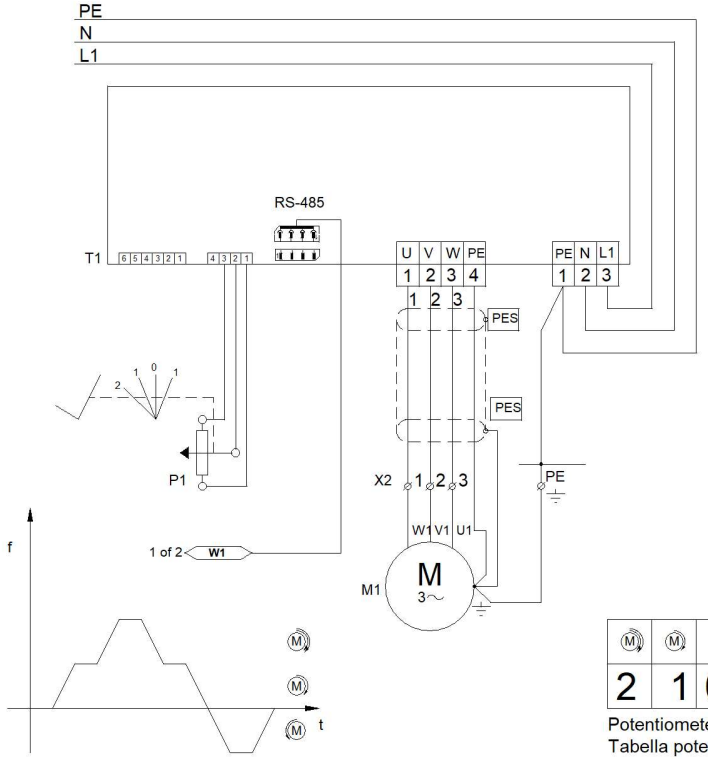

A1	Main board	Scheda comando
B1	Vertical Movement pot.	Pot. Movimento Verticale
B2	Horizontal Movement pot.	Pot. Movimento Orizzontale
B3	Bead Breaker Master pot.	Pot. Stallonatore Master
B4	Bead Breaker Slave pot.	Pot. Stallonatore Slave
B5	Pin hole camera	Telecamera
F1	Primary transf. fuse	Fusibile trasformatore
F2	Primary transf. fuse	Fusibile trasformatore
F3	Secondary transf. fuse	Fusibile trasformatore
F4	Secondary transf. fuse	Fusibile trasformatore
G1	12Vdc Power supply	Alimentatore 12Vdc
H1	LED AUTO	LED AUTO
H2	LED LOCK	LED LOCK
H3	5" Monitor	Monitor da 5"
M1	Chuck motor	Motore autocentrante
M2	Tool motor	Motore utensile
M3	Bead breaker motor	Motore stallonatore
Q1	Main switch	Interruttore principale
P1	Speed potentiometer	Potenziometro velocità
S1	Tool joystick	Joystick utensile
S2	AUTO push button	Pulsante AUTO
S3	LOCK switch	Interruttore LOCK
S5	HOME push button	Pulsante HOME
S6	BB LOCK switch	Interruttore BB LOCK
S7	Center Post microswitch	Microinterruttore Center Post
T1	Inverter	Inverter
T2	Transformer	Trasformatore
X1	Main plug	Spina di alimentazione
X2	Motor terminal block	Morsettiera motore
X3	Camera power supply	Alimentazione telecamera
X4	Video signal output	Uscita segnale video
X5	Monitor power supply	Alimentazione monitor
X6	Video signal input	Ingresso segnale video
Y1	Electric valve Clamp	Elettrovalvola Clamp
Y2	Electric valve BB Lock	Elettrovalvola BB Lock
W1	Monitor-camera harness	Cavo Monitor-telecamera
W2	Camera cable	Cavo telecamera
V1	Rectifier bridge	Ponte raddrizzatore

M	M		M
2	1	0	1

Potentiometer table
Tabella potenziometro

DENOMINAZIONE: SCHEMA ELETTRICO | FAMIGLIA: 824 | COD. GS: EEWH924AWD

THE DATA, DRAWINGS, AND INFORMATION CONTAINED IN THIS DOCUMENT IS CONFIDENTIAL AND THE SOLE PROPERTY OF SNAP-ON, AND MAY NOT BE REPRODUCED, USED, OR DISCLOSED WITHOUT WRITTEN PERMISSION OF AN OFFICER OF SNAP-ON.
COPYRIGHT 2019

UNLESS OTHERWISE SPECIFIED DIMENSIONS ARE IN MILLIMETERS
GENERAL TOLERANCES
OVER 0.5 TO 6.0 ± 0.1
OVER 6.0 TO 30 ± 0.2
OVER 30 TO 120 ± 0.3
OVER 120 TO UP ± 0.5
ANGULAR ± 1°
HOLES ± 0.1
SHEET METAL ± 0.5
SURFACE: ISO 1302

MATERIAL
ALL MATERIALS MUST COMPLY WITH RoHS, REACH, CA PROP 65, AND CONFLICT MINERALS.
FINISH
PROJ NO
DR F. Cagnolati 2019.06.25
CK

Snap-on
CORREGGIO, ITALY

ELECTRIC DIAGRAM

FIRST ANGLE PROJECTION
A3
DWG
APP
QUALITY DOC
SUPERCEDES

RELEASE REV B
EEWH924AWD
SHEET 2 OF 2

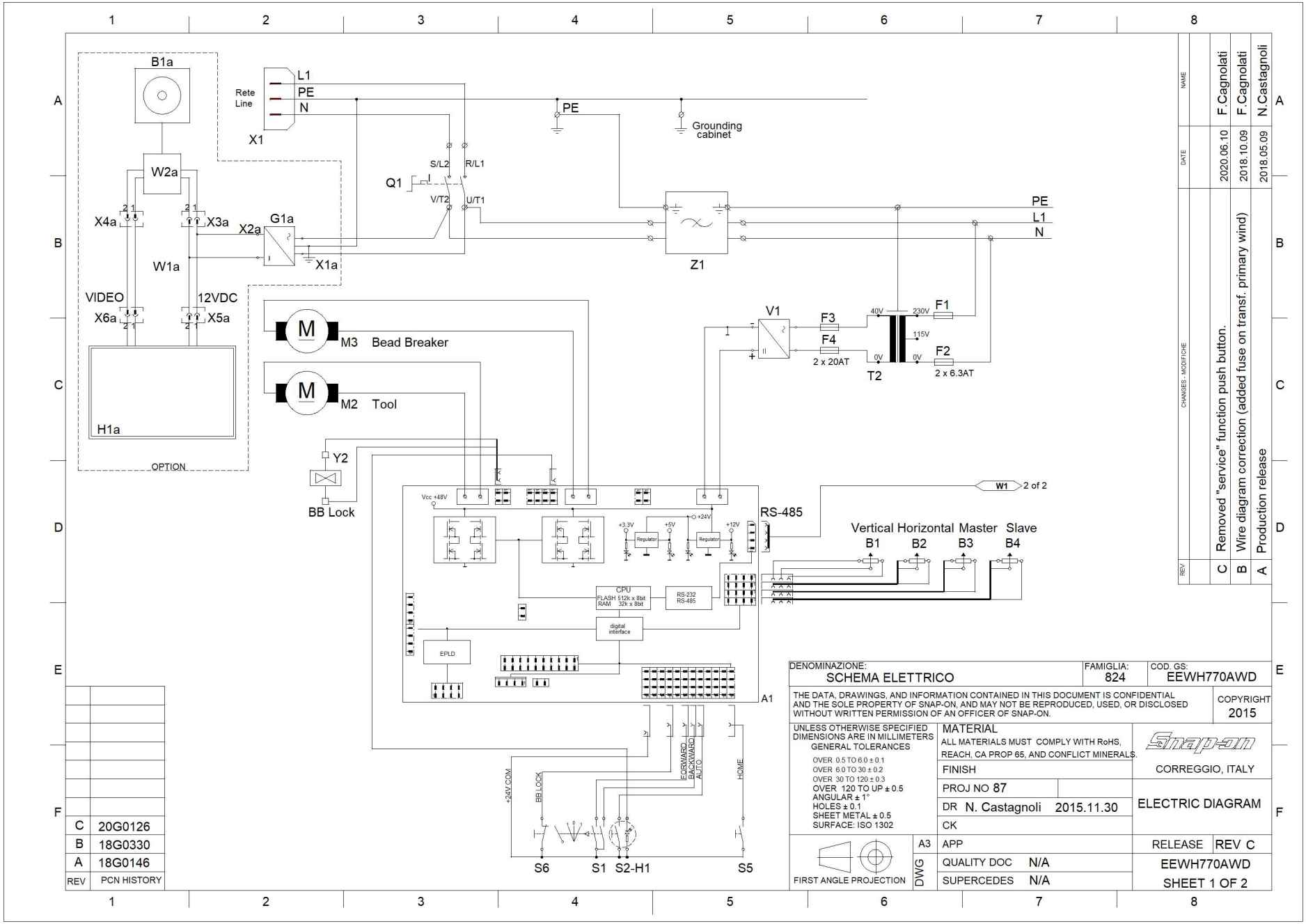

REV		NAME	DATE
C	Removed "service" function push button.	F.Cagnolati	2020.06.10
B	Wire diagram correction (added fuse on transf. primary wind)	F.Cagnolati	2018.10.09
A	Production release	N.Castagnoli	2018.05.09

CHANGES - MODIFICHE

REV	PCN HISTORY
C	20G0126
B	18G0330
A	18G0146

DENOMINAZIONE: SCHEMA ELETTRICO
FAMIGLIA: 824
COD. GS: EEWH770AWD

THE DATA, DRAWINGS, AND INFORMATION CONTAINED IN THIS DOCUMENT IS CONFIDENTIAL AND THE SOLE PROPERTY OF SNAP-ON, AND MAY NOT BE REPRODUCED, USED, OR DISCLOSED WITHOUT WRITTEN PERMISSION OF AN OFFICER OF SNAP-ON.
COPYRIGHT 2015

UNLESS OTHERWISE SPECIFIED DIMENSIONS ARE IN MILLIMETERS
GENERAL TOLERANCES
OVER 0.5 TO 6.0 ± 0.1
OVER 6.0 TO 30 ± 0.2
OVER 30 TO 120 ± 0.3
OVER 120 TO UP ± 0.5
ANGULAR ± 1°
HOLES ± 0.1
SHEET METAL ± 0.5
SURFACE: ISO 1302

MATERIAL
ALL MATERIALS MUST COMPLY WITH RoHS, REACH, CA PROP 65, AND CONFLICT MINERALS.
FINISH
PROJ NO 87
DR N. Castagnoli 2015.11.30
CK

Snap-on
CORREGGIO, ITALY

ELECTRIC DIAGRAM

FIRST ANGLE PROJECTION
A3
DWG
APP
QUALITY DOC N/A
SUPERCEDES N/A

RELEASE REV C
EEWH770AWD
SHEET 1 OF 2

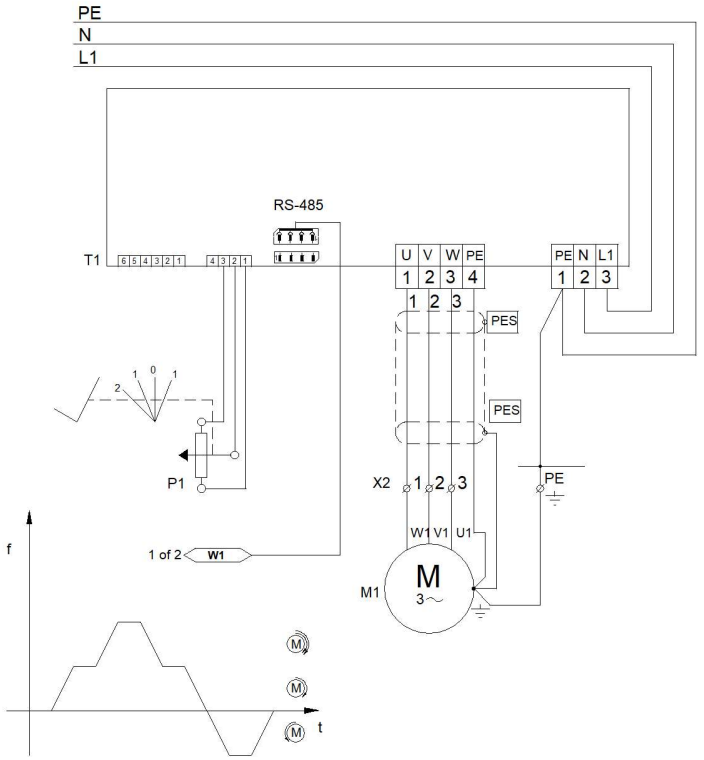

M	M		M	
2	1	0	1	

Potentiometer table
Tabella potenziometro

A1	Main board	Scheda comando
B1	Vertical Movement pot.	Pot. Movimento Verticale
B2	Horizontal Movement pot.	Pot. Movimento Orizzontale
B3	Bead Breaker Master pot.	Pot. Stallonatore Master
B4	Bead Breaker Slave pot.	Pot. Stallonatore Slave
F1	Primary transf. fuse	Fusibile primario trasformatore
F2	Primary transf. fuse	Fusibile primario trasformatore
F3	Secondary transf. fuse	Fusibile secondario trasformatore
F4	Secondary transf. fuse	Fusibile secondario trasformatore
H1	LED AUTO	LED AUTO
M1	Chuck motor	Motore autocentrante
M2	Tool motor	Motore utensile
M3	Bead breaker motor	Motore stallonatore
Q1	Main switch	Interruttore principale
P1	Speed potentiometer	Potenziometro velocità
S1	Tool joystick	Joystick utensile
S2	AUTO push button	Pulsante AUTO
S5	HOME push button	Pulsante HOME
S6	BB LOCK switch	Interruttore BB LOCK
T1	Inverter	Inverter
T2	Transformer	Trasformatore
X1	Main plug	Spina di alimentazione
X2	Motor terminal block	Morsettiera motore
Y2	Electric valve BB Lock	Elettrovalvola BB Lock
V1	Rectifier bridge	Ponte raddrizzatore
Z1	Suppressor	Filtro antidisturbo

B1a	Pin hole camera	Telecamera
G1a	12Vdc Power supply	Alimentatore da 12Vdc
H1a	5" Monitor	Monitor da 5"
W1a	Monitor-camera harness	Cablaggio Monitor-telecamera
W2a	Camera cable	Cavo telecamera

DENOMINAZIONE: SCHEMA ELETTRICO	FAMIGLIA: 824	COD. GS: EEWH770AWD	
THE DATA, DRAWINGS, AND INFORMATION CONTAINED IN THIS DOCUMENT IS CONFIDENTIAL AND THE SOLE PROPERTY OF SNAP-ON, AND MAY NOT BE REPRODUCED, USED, OR DISCLOSED WITHOUT WRITTEN PERMISSION OF AN OFFICER OF SNAP-ON.			COPYRIGHT 2015
UNLESS OTHERWISE SPECIFIED DIMENSIONS ARE IN MILLIMETERS GENERAL TOLERANCES OVER 0.5 TO 6.0 ± 0.1 OVER 6.0 TO 30 ± 0.2 OVER 30 TO 120 ± 0.3 OVER 120 TO UP ± 0.5 ANGULAR ± 1° HOLES ± 0.1 SHEET METAL ± 0.5 SURFACE: ISO 1302	MATERIAL ALL MATERIALS MUST COMPLY WITH RoHS, REACH, CA PROP 65, AND CONFLICT MINERALS.		Snap-on CORREGGIO, ITALY
	FINISH		
	PROJ NO 87		ELECTRIC DIAGRAM
	DR N. Castagnoli 2015.11.30		
	CK		
FIRST ANGLE PROJECTION	A3 APP		RELEASE REV C
	DWG QUALITY DOC N/A		EEWH770AWD
	SUPERCEDES N/A		SHEET 2 OF 2

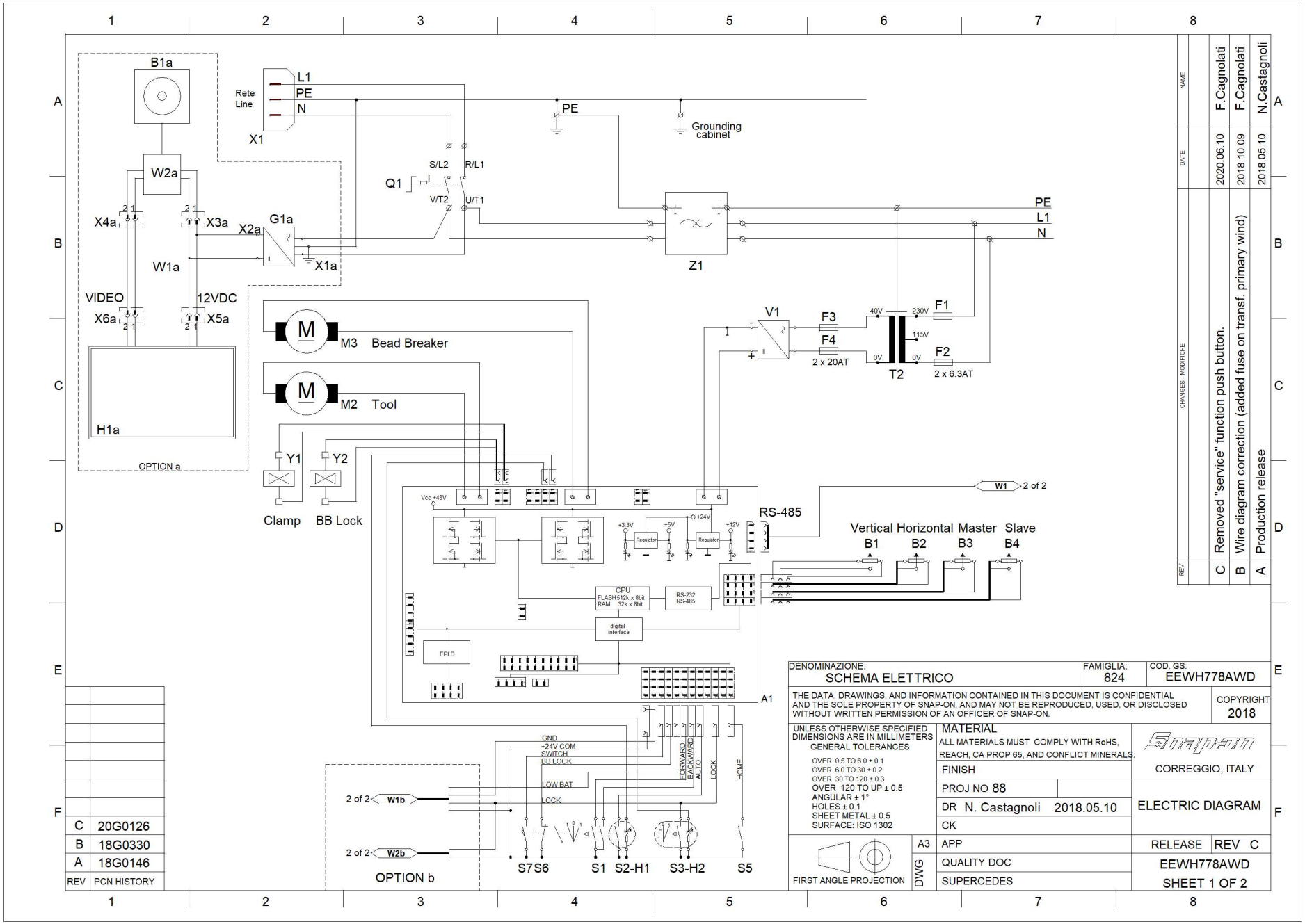

REV	PCN HISTORY
C	20G0126
B	18G0330
A	18G0146

REV		CHANGES - MODIFICHE	DATE	NAME
C		Removed "service" function push button.	2020.06.10	F.Cagnolati
B		Wire diagram correction (added fuse on transf. primary wind)	2018.10.09	F.Cagnolati
A		Production release	2018.05.10	N.Castagnoli

DENOMINAZIONE:	SCHEMA ELETTRICO
FAMIGLIA:	824
COD. GS:	EEWH778AWD

THE DATA, DRAWINGS, AND INFORMATION CONTAINED IN THIS DOCUMENT IS CONFIDENTIAL AND THE SOLE PROPERTY OF SNAP-ON, AND MAY NOT BE REPRODUCED, USED, OR DISCLOSED WITHOUT WRITTEN PERMISSION OF AN OFFICER OF SNAP-ON.
COPYRIGHT 2018

UNLESS OTHERWISE SPECIFIED DIMENSIONS ARE IN MILLIMETERS
GENERAL TOLERANCES
OVER 0.5 TO 6.0 ± 0.1
OVER 6.0 TO 30 ± 0.2
OVER 30 TO 120 ± 0.3
OVER 120 TO UP ± 0.5
ANGULAR ± 1°
HOLES ± 0.1
SHEET METAL ± 0.5
SURFACE: ISO 1302

MATERIAL
ALL MATERIALS MUST COMPLY WITH RoHS, REACH, CA PROP 65, AND CONFLICT MINERALS.
FINISH
PROJ NO 88
DR N. Castagnoli 2018.05.10
CK

Snap-on
CORREGGIO, ITALY

ELECTRIC DIAGRAM

FIRST ANGLE PROJECTION
A3
DWG
APP
QUALITY DOC
SUPERCEDES

RELEASE REV C
EEWH778AWD
SHEET 1 OF 2

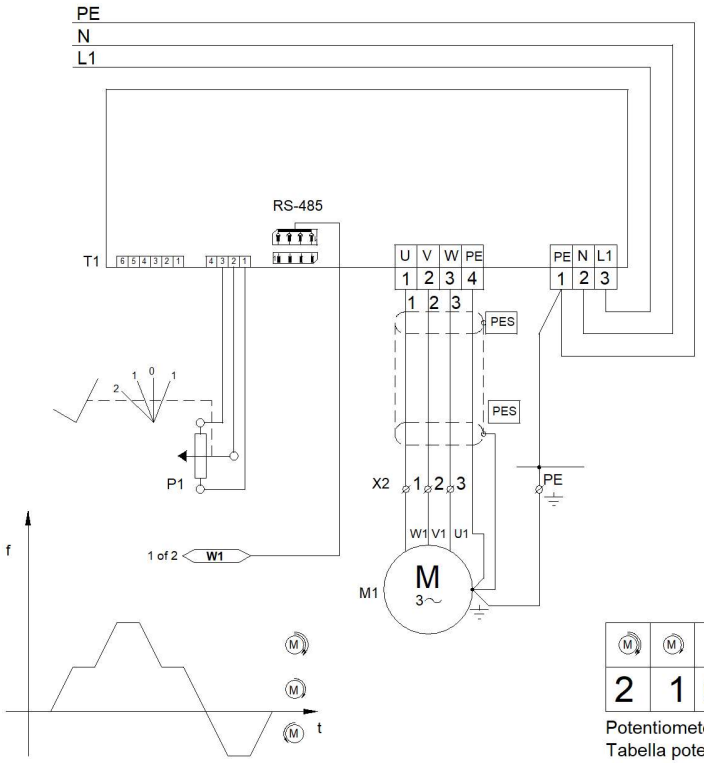

M	M		M
2	1	0	1

Potentiometer table
Tabella potenziometro

A1	Main board	Scheda comando
B1	Vertical Movement pot.	Pot. Movimento Verticale
B2	Horizontal Movement pot.	Pot. Movimento Orizzontale
B3	Bead Breaker Master pot.	Pot. Stallonatore Master
B4	Bead Breaker Slave pot.	Pot. Stallonatore Slave
F1	Primary transf. fuse	Fusibile trasformatore
F2	Primary transf. fuse	Fusibile trasformatore
F3	Secondary transf. fuse	Fusibile trasformatore
F4	Secondary transf. fuse	Fusibile trasformatore
H1	LED AUTO	LED AUTO
H2	LED LOCK	LED LOCK
M1	Chuck motor	Motore autocentrante
M2	Tool motor	Motore utensile
M3	Bead breaker motor	Motore stallonatore
Q1	Main switch	Interruttore principale
P1	Speed potentiometer	Potenziometro velocità
S1	Tool joystick	Joystick utensile
S2	AUTO push button	Pulsante AUTO
S3	LOCK switch	Interruttore LOCK
S5	HOME push button	Pulsante HOME
S6	BB LOCK switch	Interruttore BB LOCK
S7	Center Post microswitch	Microinterruttore Center Post
T1	Inverter	Inverter
T2	Transformer	Trasformatore
X1	Main plug	Spina di alimentazione
X2	Motor terminal block	Morsettiera motore
Y1	Electric valve Clamp	Elettrovalvola Clamp
Y2	Electric valve BB Lock	Elettrovalvola BB Lock
V1	Rectifier bridge	Ponte raddrizzatore
Z1	Suppressor	Filtro antidisturbo
B1a	Pin hole camera	Telecamera
G1a	12Vdc Power supply	Alimentatore da 12Vdc
H1a	5" Monitor	Monitor da 5"
W1a	Monitor-camera harness	Cavo Monitor-camera
W2a	Camera cable	Cavo telecamera

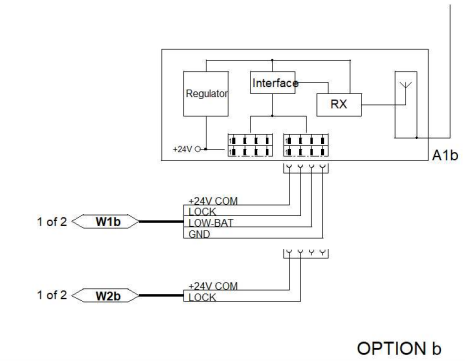

OPTION b

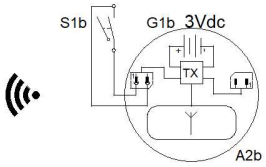

A1b	Receiver	Ricevitore
A2b	Transmitter	Trasmettitore
G1b	Button battery	Batteria
S1b	Microswitch	Microinterruttore
W1b	Cable LOCK radio	Cavo LOCK radio
W2b	Cable manual LOCK	Cavo LOCK manuale

DENOMINAZIONE: SCHEMA ELETTRICO		FAMIGLIA: 824	COD. GS: EEWH778AWD
THE DATA, DRAWINGS, AND INFORMATION CONTAINED IN THIS DOCUMENT IS CONFIDENTIAL AND THE SOLE PROPERTY OF SNAP-ON, AND MAY NOT BE REPRODUCED, USED, OR DISCLOSE WITHOUT WRITTEN PERMISSION OF AN OFFICER OF SNAP-ON.			COPYRIGHT 2018
UNLESS OTHERWISE SPECIFIED DIMENSIONS ARE IN MILLIMETERS GENERAL TOLERANCES OVER 0.5 TO 6.0 ± 0.1 OVER 6.0 TO 30 ± 0.2 OVER 30 TO 120 ± 0.3 OVER 120 TO UP ± 0.5 ANGULAR ± 1° HOLES ± 0.1 SHEET METAL ± 0.5 SURFACE: ISO 1302	MATERIAL ALL MATERIALS MUST COMPLY WITH RoHS, REACH, CA PROP 65, AND CONFLICT MINERALS.		Snap-on CORREGGIO, ITALY
	FINISH		
	PROJ NO 88		ELECTRIC DIAGRAM
	DR N. Castagnoli 2018.05.10		
	CK		
FIRST ANGLE PROJECTION	A3 APP		RELEASE REV C
	DWG QUALITY DOC		EEWH778AWD
	SUPERCEDES		SHEET 2 OF 2

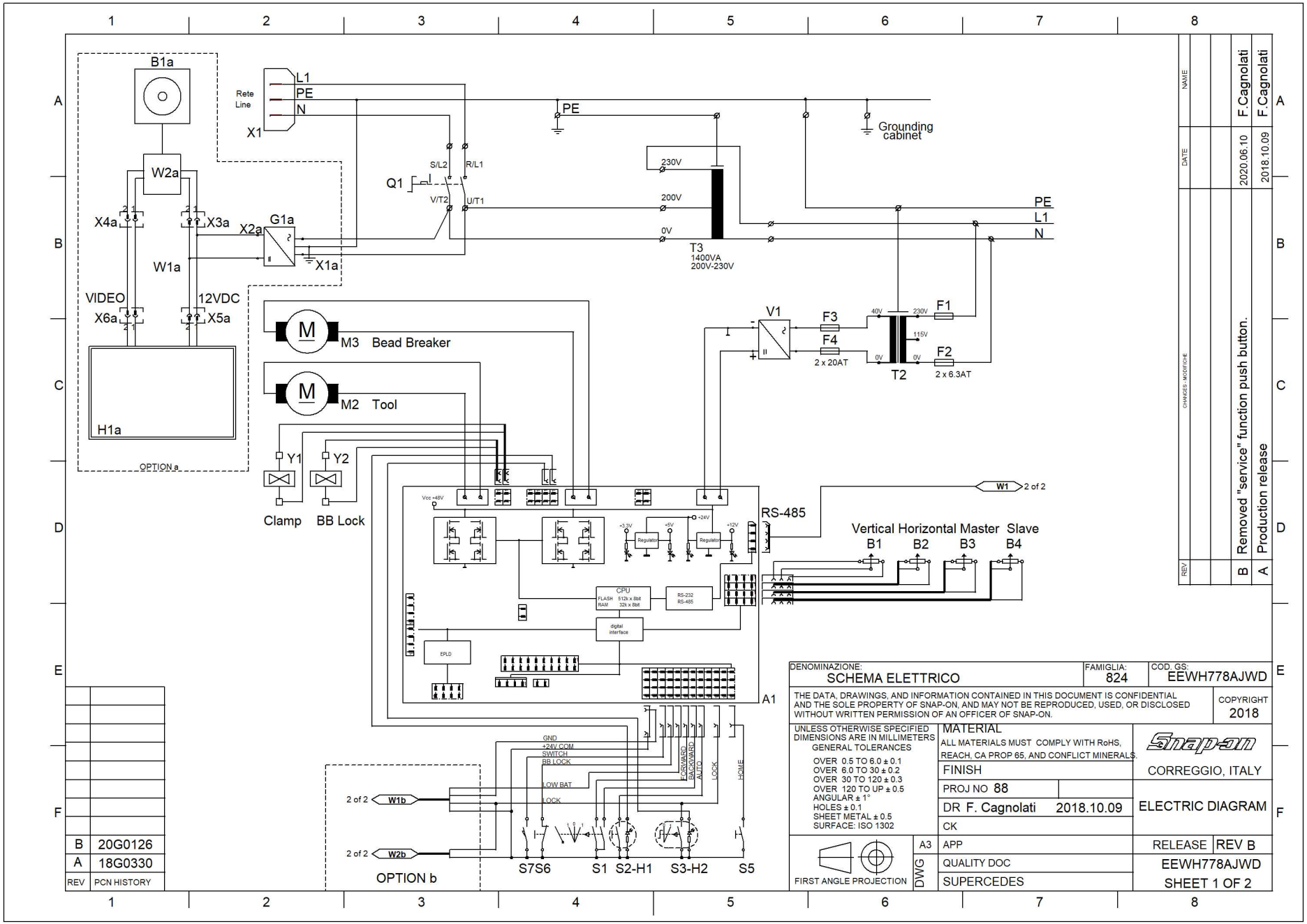

REV	NAME	DATE	CHANGES - MODIFICHE
B	F.Cagnolati	2020.06.10	Removed "service" function push button.
A	F.Cagnolati	2018.10.09	Production release

REV	PCN HISTORY
B	20G0126
A	18G0330

DENOMINAZIONE: SCHEMA ELETTRICO | FAMIGLIA: 824 | COD. GS: EEWH778AJWD

THE DATA, DRAWINGS, AND INFORMATION CONTAINED IN THIS DOCUMENT IS CONFIDENTIAL AND THE SOLE PROPERTY OF SNAP-ON, AND MAY NOT BE REPRODUCED, USED, OR DISCLOSED WITHOUT WRITTEN PERMISSION OF AN OFFICER OF SNAP-ON.
COPYRIGHT 2018

UNLESS OTHERWISE SPECIFIED DIMENSIONS ARE IN MILLIMETERS
GENERAL TOLERANCES
OVER 0.5 TO 6.0 ± 0.1
OVER 6.0 TO 30 ± 0.2
OVER 30 TO 120 ± 0.3
OVER 120 TO UP ± 0.5
ANGULAR ± 1°
HOLES ± 0.1
SHEET METAL ± 0.5
SURFACE: ISO 1302

MATERIAL
ALL MATERIALS MUST COMPLY WITH RoHS, REACH, CA PROP 65, AND CONFLICT MINERALS.
FINISH
PROJ NO 88
DR F. Cagnolati 2018.10.09
CK

Snap-on
CORREGGIO, ITALY

ELECTRIC DIAGRAM

FIRST ANGLE PROJECTION | DWG A3 | APP | QUALITY DOC | SUPERCEDES

RELEASE REV B
EEWH778AJWD
SHEET 1 OF 2

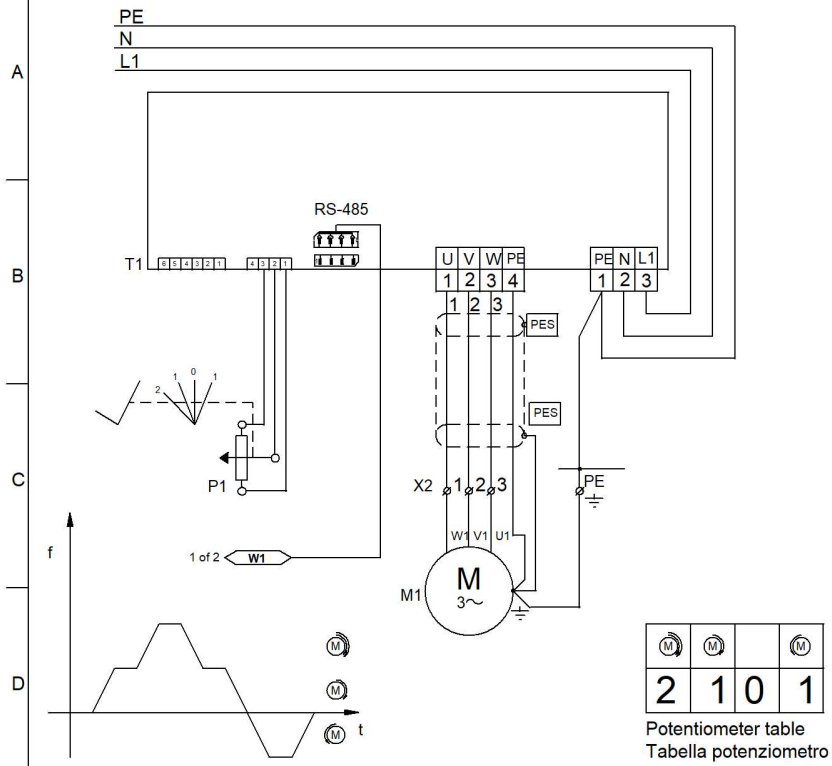

M	M	M
2	1	0	1

Potentiometer table
Tabella potenziometro

A1	Main board	Scheda comando
B1	Vertical Movement pot.	Pot. Movimento Verticale
B2	Horizontal Movement pot.	Pot. Movimento Orizzontale
B3	Bead Breaker Master pot.	Pot. Stallonatore Master
B4	Bead Breaker Slave pot.	Pot. Stallonatore Slave
F1	Primary transf. fuse	Fusibile trasformatore
F2	Primary transf. fuse	Fusibile trasformatore
F3	Secondary transf. fuse	Fusibile trasformatore
F4	Secondary transf. fuse	Fusibile trasformatore
H1	LED AUTO	LED AUTO
H2	LED LOCK	LED LOCK
M1	Chuck motor	Motore autocentrante
M2	Tool motor	Motore utensile
M3	Bead breaker motor	Motore stallonatore
Q1	Main switch	Interruttore principale
P1	Speed potentiometer	Potenziometro velocità
S1	Tool joystick	Joystick utensile
S2	AUTO push button	Pulsante AUTO
S3	LOCK switch	Interruttore LOCK
S5	HOME push button	Pulsante HOME
S6	BB LOCK switch	Interruttore BB LOCK
S7	Center Post microswitch	Microinterruttore Center Post
T1	Inverter	Inverter
T2	Transformer	Trasformatore
T3	Autotransformer	Autotrasformatore
X1	Main plug	Spina di alimentazione
X2	Motor terminal block	Morsettiera motore
Y1	Electric valve Clamp	Elettrovalvola Clamp
Y2	Electric valve BB Lock	Elettrovalvola BB Lock
V1	Rectifier bridge	Ponte raddrizzatore

B1a	Pin hole camera	Telecamera
G1a	12Vdc Power supply	Alimentatore da 12Vdc
H1a	5" Monitor	Monitor da 5"
W1a	Monitor-camera harness	Cavo Monitor-camera
W2a	Camera cable	Cavo telecamera

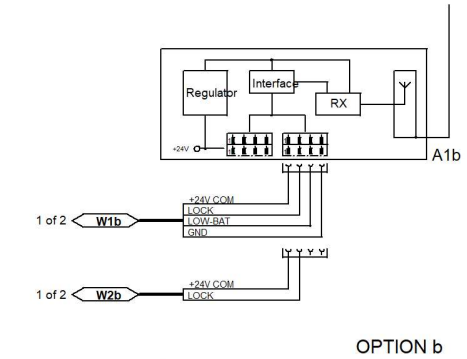

OPTION b

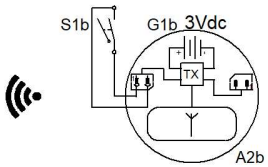

A1b	Receiver	Ricevitore
A2b	Transmitter	Trasmettitore
G1b	Button battery	Batteria
S1b	Microswitch	Microinterruttore
W1b	Cable LOCK radio	Cavo LOCK radio
W2b	Cable manual LOCK	Cavo LOCK manuale

DENOMINAZIONE: SCHEMA ELETTRICO	FAMIGLIA: 824	COD. GS: EEWH778AJWD	
THE DATA, DRAWINGS, AND INFORMATION CONTAINED IN THIS DOCUMENT IS CONFIDENTIAL AND THE SOLE PROPERTY OF SNAP-ON, AND MAY NOT BE REPRODUCED, USED, OR DISCLOSED WITHOUT WRITTEN PERMISSION OF AN OFFICER OF SNAP-ON.		COPYRIGHT 2018	
UNLESS OTHERWISE SPECIFIED DIMENSIONS ARE IN MILLIMETERS GENERAL TOLERANCES OVER 0.5 TO 6.0 ± 0.1 OVER 6.0 TO 30 ± 0.2 OVER 30 TO 120 ± 0.3 OVER 120 TO UP ± 0.5 ANGULAR ± 1° HOLES ± 0.1 SHEET METAL ± 0.5 SURFACE: ISO 1302	MATERIAL ALL MATERIALS MUST COMPLY WITH RoHS, REACH, CA PROP 65, AND CONFLICT MINERALS.	Snap-on CORREGGIO, ITALY	
	FINISH		
	PROJ NO 88	ELECTRIC DIAGRAM	
	DR F. Cagnolati 2018.10.09		
	CK		
FIRST ANGLE PROJECTION	A3 APP	RELEASE	REV B
	DWG QUALITY DOC	EEWH778AJWD	
	SUPERCEDES	SHEET 2 OF 2	

TEEWH778APD
SHEET 1 OF 1

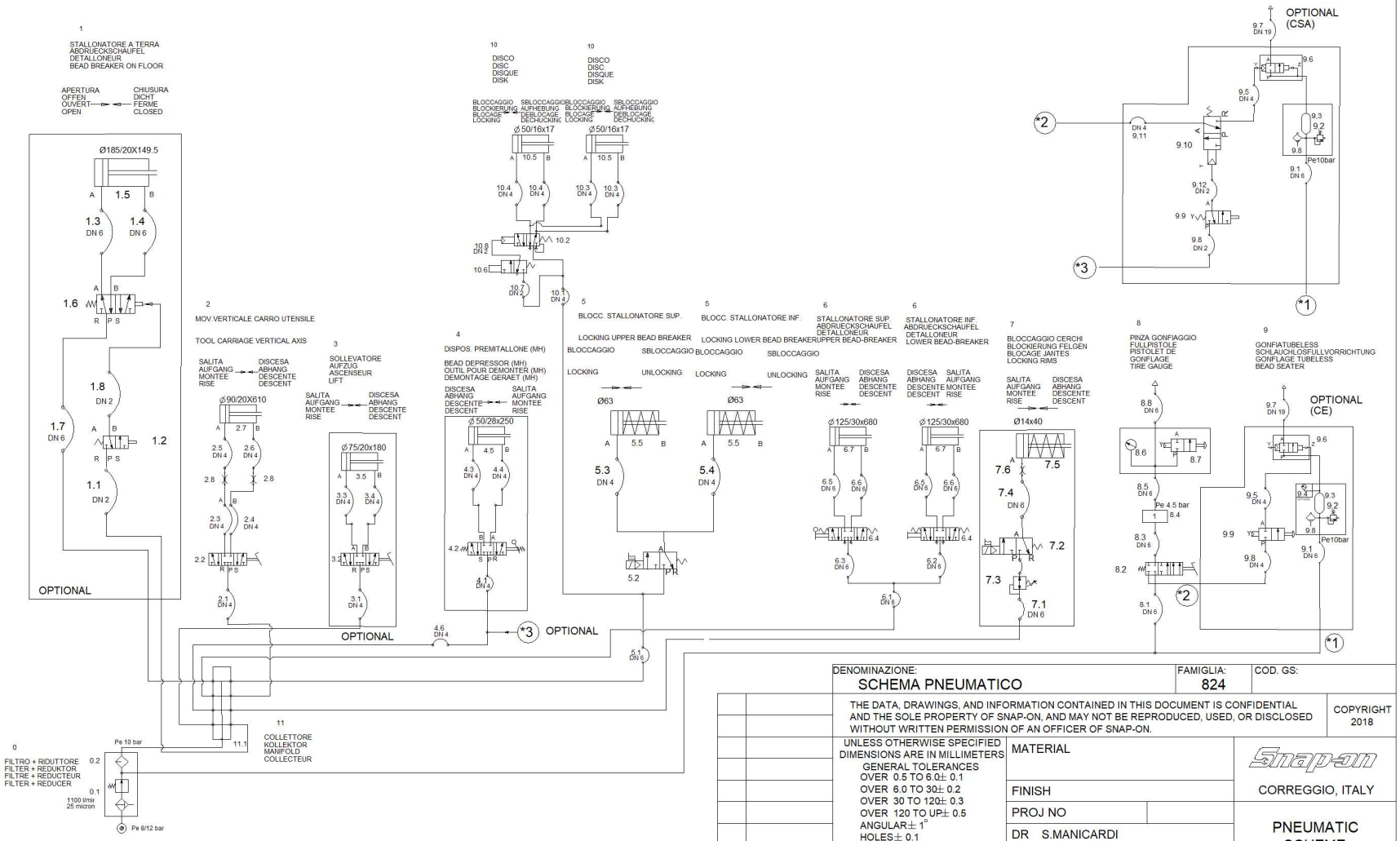

NOTA/Note
1) VALVOLA LIMITATRICE E DI CONTROLLO DELLA PRESSIONE DI GONFIAGGIO
Inflating pressure limiting and register valv

DENOMINAZIONE: SCHEMA PNEUMATICO			FAMIGLIA: 824	COD. GS:	
		THE DATA, DRAWINGS, AND INFORMATION CONTAINED IN THIS DOCUMENT IS CONFIDENTIAL AND THE SOLE PROPERTY OF SNAP-ON, AND MAY NOT BE REPRODUCED, USED, OR DISCLOSED WITHOUT WRITTEN PERMISSION OF AN OFFICER OF SNAP-ON.			COPYRIGHT 2018
		UNLESS OTHERWISE SPECIFIED DIMENSIONS ARE IN MILLIMETERS GENERAL TOLERANCES OVER 0.5 TO 6.0± 0.1 OVER 6.0 TO 30± 0.2 OVER 30 TO 120± 0.3 OVER 120 TO UP± 0.5 ANGULAR± 1° HOLES± 0.1 SHEET METAL± 0.5 SURFACE: ISO 1302	MATERIAL		Snap-on CORREGGIO, ITALY
			FINISH		
			PROJ NO		PNEUMATIC SCHEME
			DR S.MANICARDI		
			CK		
C	19G0246				
B	19G0009		A3	APP P.SOTGIU	RELEASE REV C
A	18G0149	FIRST ANGLE PROJECTION	PRO/E	QUALITY DOC	TEEWH778APD
REV	PCN HISTORY			SUPERCEDES	SHEET 1 OF 1

ENG -	DECLARATION OF CE CONFORMITY	DICHIARAZIONE CE DI CONFORMITA' - ITA
FRA -	DECLARATION CE DE CONFORMITE	DECLARAÇÃO CE DE CONFORMIDADE - POR
DEU -	KONFORMITÄTSERKLÄRUNG	DECLARACIÓN CE DE CONFORMIDAD - SPA
FIN -	EY-VAATIMUSTENMUKAISUUSVAKUUTUS	ДЕКЛАРАЦИЯ ЗА СЪОТВЕТСТВИЕ - BUL
NLD -	VERKLARING VAN OVEREENSTEMMING	ES PROHLÁŠENÍ O SHODĚ - CES
SWE -	EG-FÖRSÄKRAN OM ÖVERENSSTÄMMELSE	DEKLARACIJA CE O PODOBNOSTI - HRV
DAN -	EF-OVERENSSTEMMELSESERKLÆRING	EÜ VASTAVUSDEKLARATSIOON - EST
ISL -	EB-SAMRÆMISYFIRLÝSING	ΔΗΛΩΣΗ CE ΣΥΜΜΟΡΦΩΣΗΣ - ELL
POL -	DEKLARACJA ZGODNOŚCI "CE"	ES ATBILSTĪBAS DEKLARĀCIJA - LAV
RUM -	DECLARAŢIE DE CONFORMITATE CU NORMELE CE	ATITIKTIES DEKLARACIJA - LIT
SLO -	ES VYHLÁSENIE O ZHODE	"ЕС" ДЕКЛАРАЦИЈА ЗА СООБРАЗНОСТ - MKD
SLV -	IZJAVA O SKLADNOSTI CE	DEKLARACIJA CE O USKLAĐENOSTI - MON
ALB -	DEKLARATË KONFORMITETI KE	EC UYGUNLUK BEYANNAMESİ - TUR
HUN -	EK MEGFELELŐSÉGI NYILATKOZAT	ДЕКЛАРАЦИЯ СООТВЕТСТВИЯ СТАНДАРТАМ ЕС - RUS

Snap-on Equipment Srl - Via Provinciale per Carpi, 33 - 42015 Correggio (RE) Italy

ENG - takes full responsibility for declaring that the machine:	**TIRE CHANGER**
FRA - déclare sous sa propre responsabilité que la machine :	**DEMONTE-PNEUS**
DEU - erklärt auf eigene Verantwortung, dass die Maschine:	**REIFENMONTIERMASCHINE**
ITA - dichiara sotto la propria responsabilità che la macchina:	**SMONTAGOMME**
POR - declara sob a própria responsabilidade que a máquina:	**DEMONTADORA DE PNEUS**
SPA - declara bajo su propia responsabilidad que la máquina:	**DESMONTADOR DE NEUMÁTICOS**
ALB - deklaron nën përgjegjësinë e tij se makineria:	**ÇMONTUESE GOMASH**
BUL - декларира под отговорност, че машината:	**МАШИНА ЗА ДЕМОНТАЖ НА ГУМИ**
CES - prohlašuje na vlastní zodpovědnost, že strojní zařízení:	**ZOUVAČKA PNEUMATIK**
HRV - izjavljuje pod vlastitom odgovornošću da stroj:	**DEMONTIRAČ GUMA**
DAN - erklærer på eget ansvar, at maskinen:	**DÆKAFMONTERINGSMASKINE**
EST - kinnitab omal vastutusel, et aparaat:	**REHVIVAHETUSSEADE**
FIN - vakuuttaa omalla vastuullaan, että kone:	**RENKAANVAIHTOKONE**
ELL - δηλώνει υπεύθυνα ότι η μηχανή:	**ΜΟΧΛΟΣ ΑΦΑΙΡΕΣΗΣ ΑΕΡΟΘΑΛΑΜΟΥ**
ISL - lýsir því yfir á eigin ábyrgð að búnaður:	**AFFELGUNARVÉL**
LAV - apzinādamies savu atbildību apliecina, ka mašīna/iekārta:	**RIEPU MONTĀŽAS IEKĀRTA**
LIT - prisiimdama atsakomybę skelbia, kad mašina:	**PADANGŲ KEITIMO PRIETAISAS**
MKD - изјавува под своја одговорност дека машината:	**ДЕМОНТИРАЧ НА ГУМИ**
MON - izjavljuje pod vlastitom odgovorošću da mašina:	**DEMONTIRKA GUMA**
NLD - verklaart voor eigen verantwoordelijkheid dat de machine:	**BANDENLICHTER**
POL - oświadcza na własną odpowiedzialność, że maszyna:	**URZĄDZENIE DO ZDEJMOWANIA OPON**
RUM - declară pe propria răspundere că maşina:	**DISPOZITIV DE DEMONTAT CAUCIUCURI**
SLO - vyhlasuje na vlastnú zodpovednosť, že strojové zariadenie:	**VYZÚVAČKA PNEUMATÍK**
SLV - pod lastno odgovornostjo izjavljamo, da je stroj:	**SNEMALEC GUM**
SWE - försäkrar under eget ansvar att maskinen:	**DÄCKMONTERINGSMASKIN**
TUR - kendi sorumluluğu altında makinenin aşağıda belirtilen yönetmeliklere uygun olduğunu beyan etmektedir:	**LASTİK SÖKÜCÜ**
HUN - a saját felelősége tudatában kijelenti, hogy a gép:	**GUMISZERELŐ**
RUS - с полной ответственностью заявляет что машина	**ШИНОМОНТАЖНЫЙ СТАНОК**

Snap-on EQUIPMENT

ENG - complies with all the relevant regulations in the following directives:
FRA - est conforme à toutes les dispositions pertinentes des directives suivantes :
DEU - Allen zu folgenden Richtlinien gehörenden Bestimmungen entspricht:
ITA - è conforme a tutte le disposizioni pertinenti delle seguenti direttive:
POR - satisfaz todas as disposições relevantes das seguintes directivas:
SPA - es conforme con todas las disposiciones pertinentes a las siguientes directivas:
ALB - është konform me të gjitha dispozitat që kanë të bëjnë me direktivat e mëposhtme:
BUL - съответства на всички разпоредби, съдържащи се в следващите директиви:
CES - vyhovuje všem požadavkům, které se vztahují na následující směrnice:
HRV - udovoljava svim relevantnim odredbama slijedećih smjernica:
DAN - er i overensstemmelse med bestemmelserne i følgende direktiver:
EST - vastab järgmiste direktiivide kõikidele asjassepuutuvatele sätetele:
FIN - on seuraavien direktiivien asiaankuuluvien säännösten mukainen:
ELL - είναι σύμφωνο με όλες τις προβλέψεις σχετικές με τις ακόλουθες οδηγίες:
ISL - er í samræmi við allar viðeigandi tilskipanir eftirfarandi reglugerða:
LAV - atbilst visiem attiecīgajiem noteikumiem šādās direktīvās:
LIT - atitinka visus toliau nurodytų direktyvų reikalavimus:
MKD - е во согласност со сите норми од следниве директиви:
MON - je u skladu sa svim relevantnim odredbama sledećih direktiva:
NLD - overeenstemt met alle toepasselijke voorschriften van de volgende richtlijnen:
POL - jest zgodna (jest zgodny) ze wszystkimi zarządzeniami zawartymi w następujących dyrektywach:
RUM - este fabricat în conformitate cu toate prevederile în materie din următoarele directive:
SLO - vyhovuje všetkým požiadavkám, vzťahujúcim sa na nasledujúce smernice:
SLV - v skladu z vsemi predpisi, ki se nanašajo na naslednje direktive:
SWE - överensstämmer med alla bestämmelser tillhörande följande direktiv:
TUR - aşağıda belirtilen yönetmeliklere ilişkin tüm hükümlere uygundur:
HUN - megfelel a következő irányelvekbe foglalt, valamennyi rendelkezésnek:
RUS - соответствует всем применяемым нормам следующих директив:

2006/42/EC

2014/53/EU

2014/30/EU

ENG-The manufacturer -	FRA-Le fabricant -	DEU-Der Hersteller -	ITA-Il fabbricante -	POR-O fabricante -	SPA-El fabricante -
ALB-Prodhuesi -	BUL-Производителят -	CES-Výrobce -	HRV-Proizvođač -	DAN-Fabrikanten -	EST-Tootja -
FIN-Valmistaja -	ELL-Ο κατασκευαστής -	ISL-Framleiðandi -	LAV-Ražotājam -	LIT-Gamintojas -	MKD-Производителот -
MON-Proizvođač -	NLD-De fabrikant -	POL-Producent -	RUM-Producătorul -	SLO-Výrobca -	SLV-Proizvajalec -
SWE-Tillverkaren -	TUR-Üretici, -	HUN-A gyártó -	RUS-Изготовитель -		

Snap-on Equipment Srl - Via Provinciale per Carpi, 33 - 42015 Correggio (RE) Italy

ENG- is authorised to compile a technical leaflet in compliance with appendix VII, letter A, of the 2006/42/CE directive.
FRA- est autorisé à constituer le fascicule technique visé sous l'annexe VII lettre A de la directive 2006/42/CE.
DEU- ist bevollmächtigt, die technischen Unterlagen zu erstellen (siehe Anhang VII, Buchstabe A der Richtlinie 2006/42/CE.
ITA- è autorizzato a costituire il fascicolo tecnico di cui all'allegato VII lettera A della direttiva 2006/42/CE.
POR- está autorizado a compilar o processo técnico, referido no anexo VII alínea A da directiva 2006/42/CE.
SPA- está autorizado a constituir el fascículo técnico indicado en el anexo VII letra A de la directiva 2006/42/CE.
ALB- është i autorizuar të realizojë fashikullin teknik sipas dokumentit bashkëngjitur VII germa A e direktivës 2006/42/KE.
BUL- е упълномощен да състави техническата брошура в съответствие с Приложение VII, „A", Директива 2006/42/ЕС.
CES- je oprávněný vypracovat technickou dokumentaci podle přílohy VII části A Směrnice 2006/42/ES.
HRV- je ovlaštena ustrojiti tehnički svezak kako se vidi u dodatku VII slovo A smjernice 2006/42/CE.
DAN- er bemyndiget til udarbejdelse af den tekniske dokumentation jf. bilag VII litra A i direktivet 2006/42/EF.
EST- on volitatud koostama tehnilise toimiku vastavalt direktiivi 2006/42/EÜ VII lisa osale A.
FIN- on valtuutettu kokoamaan tekninen eritelmä direktiivin 2006/42/EY liitteen VII kohdan A mukaisesti.
ELL- είναι εξουσιοδοτημένος να παράξει τον τεχνικό φάκελο σύμφωνα με το συνημμένο VII γράμμα Α της οδηγίας 2006/42/ΕΚ.
ISL- hefur heimilt að gera tækniskjalið samkvæmt A-lið VII. viðauka í reglugerð 2006/42/EB.
LAV- ir pilnvarots sastādīt tehnisko dokumentāciju atbilstoši ES direktīvas 2006/42/EK VII pielikuma A iedaļai.
LIT- turi yra įgaliotas sudaryti techninę bylą, kurios sudarymo tvarka nurodyta Direktyvos 2006/42/EB VII priedo A dalyje.
MKD- е овластен да го состави техничкиот прирачник даден во прилог VII писмо А од директивата 2006/42/ЕЗ.
MON- je ovlašteno da sastavi tehničku fasciklu kako se vidi u dodatku VII slovo A direktive 2006/42/CE.
NLD- is gemachtigd om het technisch dossier samen te stellen waarover in Bijlage VII, afdeling A, van de richtlijn 2006/42/EG.
POL- jest upoważniony do założenia skoroszytu technicznego, o którym mowa w Załączniku VII litera A dyrektywy 2006/42/UE.
RUM- este autorizat să întocmească dosarul tehnic prevăzut în anexa VII litera A directiva 2006/42/CE privind echipamentele tehnice.
SLO- je oprávnený vypracovať technickú dokumentáciu podľa prílohy VII časti A Smernice 2006/42/ES.
SLV- je pooblašèena za sestavo tehnične mape, kot navedeno v prilogi VII, èrka A direktive 2006/42/ES.
SWE- är behörig att sammanställa medföljande teknisk dokumentation i enlighet med avsnitt A i bilaga VII i direktiv 2006/42/EG.
TUR- 2006/42/EC Yönetmeliği'nin VII. ekinin A harfinde belirtilen teknik dosyayı hazırlamaya yetkilidir.
HUN- jogosult a 2006/42/EK irányelv A részének VII. Mellékletében meghatározott, műszaki dokumentáció összeállítására.
RUS- уполномочен составить технический лист в соответствии с приложением VII, литер А директивы 2006/42/CE.

ITA-Direttore Operativo SPA-Director Operativo POR-Director Operacional ENG-Operations Manager FRA-Directeur Opérationnel DEU-Betriebsleiter ALB-Drejtori Operativ BUL-Оперативен директор CES-Výkonný ředitel HRV-Operativni direktor DAN-Driftsleder EST-Tegevdirektor FIN-Operatiivinen johtaja ELL-Επιχειρησιακός Διευθυντής ISL-Starfandi framkvæmdarstjóri LAV-Operatīvais direktors LIT-Operacijų vadovas MKD-Оперативен директор MON-Operativni direktor NLD-Operationeel directeur POL-Dyrektor Operatywny RUM-Director Operator SLO-Výkonný riaditeľ SLV-Operativni vodja SWE-Driftledare TUR-İşletme Müdürü HUN-Operatív Igazgató RUS - Управляющий производством

Francesco Frezza

F. Frezza

CE

Correggio (RE) - ITALY

date:

Notice The information contained in this document is subject to change without notice. Snap-on makes no warranty with regard to this material. Snap-on shall not be liable for errors contained herein or for incidental consequential damages in connection with furnishings, performance, or use of this material.

Snap-on EQUIPMENT

Snap-on Equipment Srl a unico socio

Via Provinciale per Carpi 33,
42015 Correggio (R.E.), Italy
Tel. ++39 (0)522 733480
Fax: ++39 (0)522 733479
E-mail: corrcs@snapon.com
Internet: www.snapon-equipment.eu

copyright 2020

SOE Digital Code: SP_TC VAS 741 077-079_20-11_V_TEEWH770AV3